GANTER GRIFF

Standardparts

15.0

Catalogue

New products and
product extensions

BERGER TOOLS LTD

www.berger-tools.co.uk

Content

Ganter – Product overview – Main Catalogue 15.0

Standard Parts for Clamping and Operating → *Page* *2/3*
Machine and Fixture Elements → *Page* *4/5*

Ganter – The Catalogue

How to use this catalogue → *Page* *6/7*

Ganter – The Company

Company profile → *Page* *8/9*
Ganter - Webshop → *Page* *10*
Customized Solutions → *Page* *11*

New Products and Product Extensions to Catalogue 15.0 → *from Page* *12*

Annexe

Technical information, Tables → *from Page* *314*
Numerical index → *from Page* *350*

With the publication of this catalogue, all previous issues become invalid. Technical details are subject to change without notice. The details given herein comply with state of the art engineering at the time of printing. We reserve the right to amend errors and to remove individual articles from the product assortment. The products listed in this catalogue have been developed as standard products with the aim of covering the widest possible spectrum of requirements. We cannot be held liable and responsible for special applications involving extraordinary or unusual uses or requirements concerning our products. Our design department will be pleased to answer questions on certain product properties such as missing tolerance, dimensional details or strength classes. All rights in the catalogue are held by Otto Ganter GmbH & Co. KG. Reprints, also in extracts, are not permitted.

Otto GANTER GmbH & Co. KG, December 2015

Standard Parts for Clamping and Operating in the Main Catalogue 15.0

1.1 Handles, Knobs

1.2 Cabinet „U“ handles, Tubular handles, Gripping trays

1.3 Cranked handles

1.4 Handwheels

1.5 Adjustable hand levers, Ratchets

1.6 Clamping levers, Tension levers

1.7 Star knobs, Wing screws, Knurled screws

1.8 Indexing mechanisms, Control knobs, Adjustable slide units

1.9 Position indicators

Machine and Fixture elements in the Main Catalogue 15.0

2.1 Indexing plungers, Locking pins, Spring plungers

2.2 Screws and Nuts, Washers, Lifting accessories

2.3 Eccentrical cams, Clamping bolts, Clamping units

2.4 Toggle clamps, Power clamps, Hook clamps

2.5 Levelling feet, Latches, Hinges

2.6 Oil level sight glasses, Level indicators, Plugs

2.7 Universal joints, Ball joints, Fork joints

2.8 Tube clamp connectors, Linear actuators

2.9 Retaining magnets

Quality – page after page

When it comes to developing standard elements, Ganter's top priority is quality and ultimate customer focus. And the same standard is also true for the Ganter catalogue: it will take you to the product you're looking for in just three easy steps.

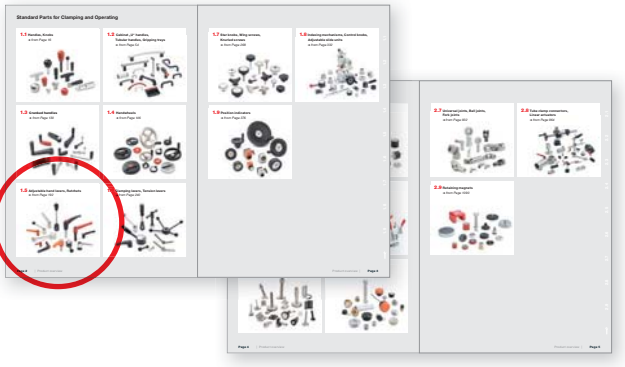

Main page Product Groups

The first page of the catalogue shows an overview of all 18 product groups, broken down into the main groups „Standard Parts for Clamping and Operating" and „Machine and Fixture Elements". They'll help you to find your way around.

Product group Home page

Single product overview

The thumb index will show you the full range of all standard elements in a certain product group. This overview allows you to target the actual product.

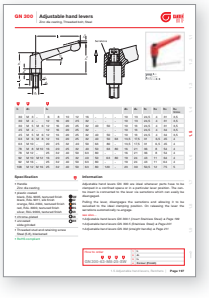

Standard Sheet

The Ganter Standard Sheet has an identical structure for all standard elements, clearly presents the relevant information about the product and, where applicable, gives a reference to accessories or product alternatives.

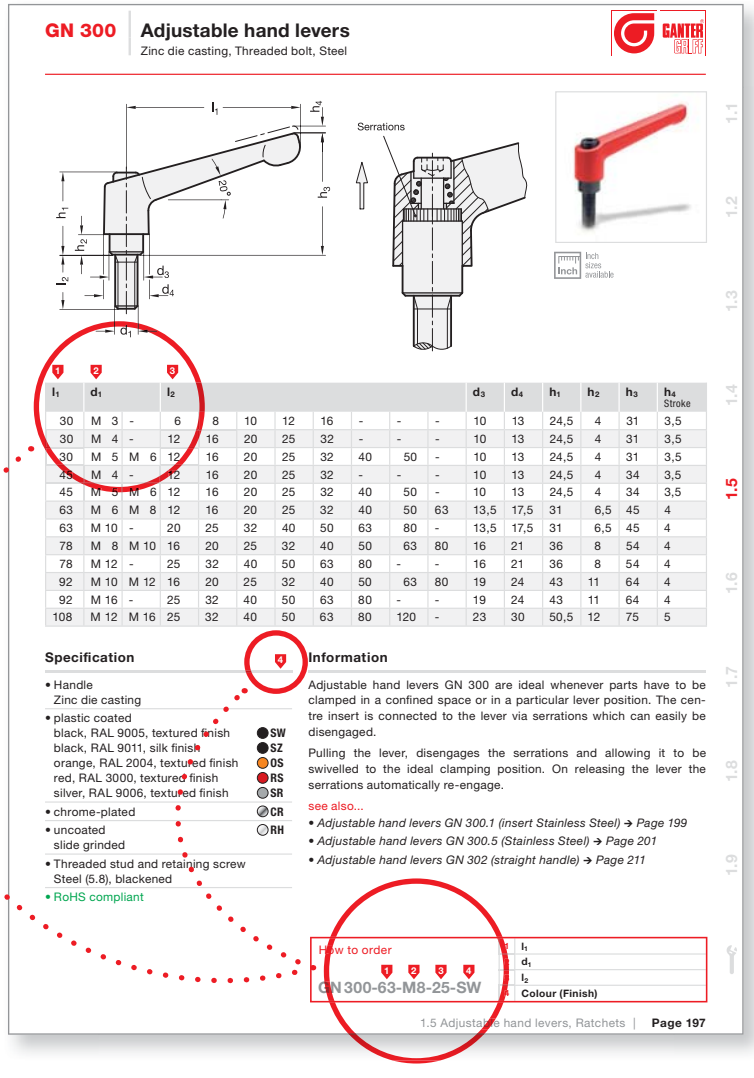

GN 300 **Adjustable hand levers**
Zinc die casting, Threaded bolt, Steel

GANTER NORELEM GRIFF

Inch sizes available

1 l_1	2 d_1		3 l_2								d_3	d_4	h_1	h_2	h_3	h_4 Stroke
30	M 3	-	6	8	10	12	16	-	-	-	10	13	24,5	4	31	3,5
30	M 4	-	12	16	20	25	32	-	-	-	10	13	24,5	4	31	3,5
30	M 5	M 6	12	16	20	25	32	40	50	-	10	13	24,5	4	31	3,5
45	M 4	-	12	16	20	25	32	-	-	-	10	13	24,5	4	34	3,5
45	M 5	M 6	12	16	20	25	32	40	50	-	10	13	24,5	4	34	3,5
63	M 6	M 8	12	16	20	25	32	40	50	63	13,5	17,5	31	6,5	45	4
63	M 10	-	20	25	32	40	50	63	80	-	13,5	17,5	31	6,5	45	4
78	M 8	M 10	16	20	25	32	40	50	63	80	16	21	36	8	54	4
78	M 12	-	25	32	40	50	63	80	-	-	16	21	36	8	54	4
92	M 10	M 12	16	20	25	32	40	50	63	80	19	24	43	11	64	4
92	M 16	-	25	32	40	50	63	80	-	-	19	24	43	11	64	4
108	M 12	M 16	25	32	40	50	63	80	120	-	23	30	50,5	12	75	5

Specification

- Handle
  Zinc die casting
- plastic coated
  black, RAL 9005, textured finish — SW
  black, RAL 9011, silk finish — SZ
  orange, RAL 2004, textured finish — OS
  red, RAL 3000, textured finish — RS
  silver, RAL 9006, textured finish — SR
- chrome-plated — CR
- uncoated
  slide grinded — RH
- Threaded stud and retaining screw
  Steel (5.8), blackened
- RoHS compliant

Information

Adjustable hand levers GN 300 are ideal whenever parts have to be clamped in a confined space or in a particular lever position. The centre insert is connected to the lever via serrations which can easily be disengaged.

Pulling the lever, disengages the serrations and allowing it to be swivelled to the ideal clamping position. On releasing the lever the serrations automatically re-engage.

see also...

- *Adjustable hand levers GN 300.1 (insert Stainless Steel)* → *Page 199*
- *Adjustable hand levers GN 300.5 (Stainless Steel)* → *Page 201*
- *Adjustable hand levers GN 302 (straight handle)* → *Page 211*

How to order

1 2 3 4
GN 300-63-M8-25-SW

1 l_1
2 d_1
3 l_2
4 Colour (Finish)

1.5 Adjustable hand levers, Ratchets | **Page 197**

1.1 1.2 1.3 1.4 1.5 1.6 1.7 1.8 1.9

Ordering made easy

Ganter products normally have a self-explanatory article number, made up of the standard description, product characteristics showing the sizes and materials, and an identifier for certain types of design or construction. For clearer understanding, each standard sheet also gives at least one example.

The leading partner for standard machine elements

Catalogue 1912

Standard machine elements – for over 100 years

Established in 1894 as a mechanical workshop, Ganter presented the first catalogue for standard elements as early as 1912 – five years before the foundation of the Deutsche Industrie Norm (DIN). The idea of standardising industrial products, manufacturing these in economical lot sizes, storing and selling them individually was entirely new at that time. Right to this day, this principle has been underlying our actions which, thanks to high availability and the latest in production engineering, guarantee ultimate benefits for the customer.

Leading worldwide

Ganter is at the leading edge in the development, production and marketing of standard elements for the entire industry. Quality and the volume of the production selection set standards across all industries. Ganter's standard machine elements are on offer worldwide through an efficient sales network. Quality, advice and availability are so guaranteed – wherever you are.

Service inclusive

Ganter's unique range of standard machine elements has the matching product for virtually every possible application – if not, help is at hand with customised solutions. One thing is certain, though: standard machine elements by Ganter come from a single source and give the best possible support to the design and procurement process.

Quick and direct

Thanks to Ganter's tight logistics concept, we are capable of delivering standard elements within the shortest possible time - anywhere in the world.

Ganter is a long-time member of DIN Deutsches Institut für Normung e. V.

A matter of course

The name Ganter stands for first-class grades in service, something which has been acknowledged and attested by the German TÜV. And Ganter is also certified under DIN EN ISO 9001 and ISO 14001.

Elesa S.p.A., Monza

Powerful partners

Ganter's product range has always been strictly driven by needs and requirements of the market. Supplementing this range with strategic alliances and partnerships with other manufacturers has always been part of this philosophy. Elesa Standards, unique plastic elements in design and workmanship, have been part of the Ganter product range for almost 40 years. Today, standard machine elements made by Ganter and Elesa are available in many markets worldwide under the common brand name Elesa+Ganter.

Standard elements in real time

www.ganter-griff.com

All data and new products immediately at hand: Ganter allows the direct access to all important items of information – from any computer and from any place. The Ganter website supports users in selecting the matching elements, regularly delivers updated information and - naturally - allows orders to be placed online.

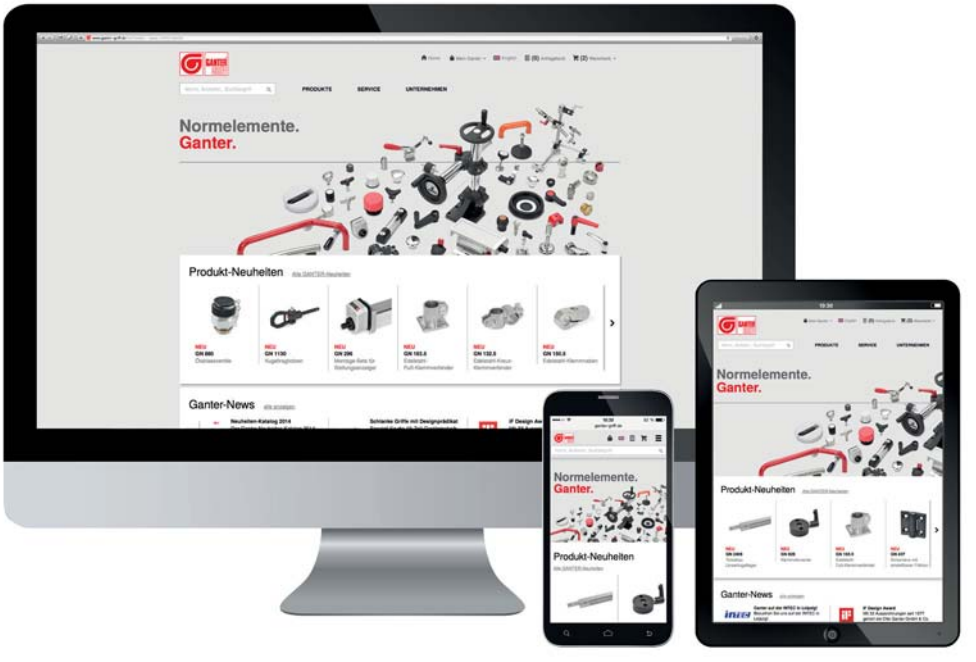

Beyond standards

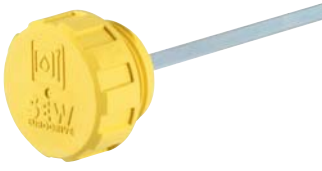

Customised solutions are part of Ganter's core competence. In spite of the enormous variety of standardised elements, there are often highly specific requirements in terms of dimensions, materials or functionality. Working closely with the customer, Ganter then develops individual solutions.

New or adapted
Depending on requirement profile, customised elements are made by cost-effectively adapting an existing Ganter standard element – or by means of an entirely new design.

Also in small unit quantities
A unique variety of different production methods and an adaptable, customer driven organisation allow standard elements to be adapted and customised even in relatively small unit quantities.

All-round service
Ganter not only develops and manufactures customised standard elements. If required, Ganter also manages their on-call inventories, guaranteeing economical lot or batch sizes, favourable prices and a high level of supply availability.

New products and Product extensions to Catalogue 15.0

GN 719.2
Domed gear knobs
Plastic

→ *Page 26*

GN 719.2
Domed gear knobs
Plastic

→ *Page 26*

GN 675
Softline-Ball handles
without cap
Plastic

→ *Page 27*

GN 675.1
Softline-Ball handles
with cap
Plastic

→ *Page 27*

GN 675
Softline-ball handles
with
threaded stud
Plastic

→ *Page 28*

GN 75
Waist shaped knobs
with female thread
Steel

→ *Page 29*

GN 75
Waist shaped knobs
with threaded stud
Steel

→ *Page 29*

GN 75.5
Waist shaped knobs
with female thread
Stainless Steel

→ *Page 29*

GN 75.5
Waist shaped knobs
with threaded stud
Stainless Steel

→ *Page 29*

GN 565
Cabinet „U“ handles
Aluminium

→ *Page 30*

GN 565.1
Cabinet „U“ handles
Aluminium

→ *Page 31*

GN 565.5
Cabinet „U“ handles
Stainless Steel

→ *Page 32*

GN 725.1
Cabinet „U“ handles
Plastic

→ *Page 33*

GN 565.7
Inclined cabinet „U“ handles
Stainless Steel

→ *Page 34*

GN 565.3
Cabinet „U“ handles
Aluminium

→ *Page 35*

GN 426.6
Cabinet „U“ handles
Stainless Steel

→ *Page 36*

GN 426.5
Cabinet „U“ handles
Stainless Steel

→ *Page 37*

GN 181
Fastening sets
for cabinet
„U“ handles
Zinc die casting

→ *Page 38*

GN 630.1
Cabinet „U“ handles
Plastic

→ *Page 39*

GN 423
„U“ handles
Aluminium /
Plastic

→ *Page 40*

GN 333
Tubular handles
Aluminium /
Zinc die casting

→ *Page 41*

Stainless Steel | Ergostyle | Softline | Cleanline | Profile | ATEX | ESD | Inch

New products and Product extensions to Catalogue 15.0

NEW

GN 630
Ledge handles
Plastic

→ *Page 42*

GN 472.3
Cranked handles
with
retractable handle
Aluminium

→ *Page 51*

NEW

GN 300.6
Adjustable hand levers
Stainless Steel
electropolished

→ *Page 55*

NEW

GN 825.1
Folding handles
Plastic

→ *Page 43*

GN 736
Control handwheels
Aluminium

→ *Page 52*

GN 603
Adjustable hand lever
with
releasing button
Plastic

→ *Page 56*

NEW

GN 825.2
Folding handles with recessed tray
Plastic

→ *Page 44*

GN 227.2
Handwheels
Pressed
Stainless Steel
AISI 304 (A2)

→ *Page 53*

GN 603.1
Adjustable hand lever
with releasing button
Plastic /
Stainless Steel

→ *Page 57*

NEW

GN 731
Gripping trays
Plastic

→ *Page 46*

NEW

GN 227.4
Handwheels
Pressed
Stainless Steel
AISI 316L (A4)

→ *Page 53*

NEW

GN 6305.1
Quick release toggle nuts
Steel

→ *Page 58*

NEW

GN 731
Gripping trays
Plastic

→ *Page 46*

GN 300.5
Adjustable hand levers
Stainless Steel

→ *Page 54*

GN 150
Split hubs
Sintered Steel

→ *Page 59*

GN 731.1
Gripping trays
clip-in type
Plastic

→ *Page 48*

NEW

GN 300.6
Adjustable hand levers
Stainless Steel
electropolished

→ *Page 54*

NEW

GN 150.5
Split hubs
Stainless Steel

→ *Page 59*

GN 570.2
Cranked handles
Plastic

→ *Page 50*

GN 300.5
Adjustable hand levers
Stainless Steel

→ *Page 55*

GN 623
Gear levers
Plastic / Steel

→ *Page 60*

Stainless Steel | Ergostyle | Softline | Cleanline | Profile | ATEX | ESD | Inch

New products and Product extensions to Catalogue 15.0

NEW

GN 623.5
Gear levers
Plastic /
Stainless Steel

→ *Page 60*

NEW

GN 6336.13
Star knobs
with loss protection
Plastic /
Stainless Steel

→ *Page 65*

NEW

GN 5337.9
Safety star knobs
with threaded bolt
Lockable
Plastic

→ *Page 69*

GN 5334
Star knobs
Stainless Steel
AISI 304 (A2)

→ *Page 62*

NEW

GN 6336.13
Star knobs
threaded bolt
with loss protection
Plastic /
Stainless Steel

→ *Page 65*

GN 5335
Star knobs
Stainless Steel
AISI 303

→ *Page 70*

NEW

GN 5334.4
Star knobs
Stainless Steel
AISI 316L (A4)

→ *Page 62*

GN 5337.2
Star knobs
Plastic

→ *Page 66*

NEW

GN 5335.4
Star knobs
Stainless Steel
AISI 316L (A4)

→ *Page 70*

GN 5334
Star knobs with threaded bolt
Stainess Steel
AISI 304 (A2)

→ *Page 63*

GN 5337.2
Star knobs
with threaded bolt
Plastic

→ *Page 67*

NEW

GN 5335
Star knobs
with threaded bolt
Stainless Steel

→ *Page 71*

NEW

GN 5334.4
Star knobs with threaded bolt
Stainless Steel
AISI 316L (A4)

→ *Page 63*

NEW

GN 5337.6
Softline - Star knobs
Plastic

→ *Page 68*

GN 434
Wing nuts
Stainless Steel

→ *Page 72*

NEW

GN 5345
Three-lobe-knobs
Stainless Steel
AISI 303

→ *Page 64*

NEW

GN 5337.6
Softline - Star knobs
with threaded bolt
Plastic

→ *Page 68*

GN 433
Wing screws
Stainless Steel

→ *Page 72*

NEW

GN 5345.4
Three-lobe-knobs
Stainless Steel
AISI 316L (A4)

→ *Page 64*

NEW

GN 5337.9
Safety star knobs
Lockable
Plastic

→ *Page 69*

NEW

GN 3663
Torque knurled knobs

→ *Page 73*

Stainless Steel | Ergostyle | Softline | Cleanline | Profile | ATEX | ESD | Inch

New products and Product extensions to Catalogue 15.0

NEW

GN 3663
Torque knurled knob screws

→ *Page 73*

NEW

GN 2280
Bull's eye levels
Aluminium

→ *Page 88*

GN 727
Control knobs with adjustable spindle
Steel / Aluminium

→ *Page 88*

NEW

GN 653.2
Flat knurled screws
Steel

→ *Page 74*

NEW

GN 2281
Bull's eye levels
Aluminium

→ *Page 83*

NEW

GN 2402
Linear slides
Steel

→ *Page 93*

NEW

GN 653.2
Flat knurled screws
Stainless Steel

→ *Page 74*

NEW

GN 2282
Screw-on levels
Brass

→ *Page 84*

NEW

GN 2404
Telescopic linear slides
Steel

→ *Page 94*

NEW

GN 2277
Bull's eye levels
Aluminium

→ *Page 78*

NEW

GN 711.2
Rulers
Aluminium

→ *Page 85*

NEW

GN 2406
Telescopic linear slides
Steel

→ *Page 95*

NEW

GN 2277.1
Adjustment plates
for GN 2277
Stainless Steel

→ *Page 79*

NEW

GN 711.3
Indicator arrow
Aluminium

→ *Page 85*

NEW

GN 2408
Telescopic linear slides
Steel

→ *Page 96*

NEW

GN 2278
Bull's eye levels
Aluminium

→ *Page 80*

NEW

DIN 526
Control knobs
Plastic

→ *Page 86*

NEW

GN 2410
Telescopic linear slides
Steel

→ *Page 97*

NEW

GN 2279
Bull's eye levels
Aluminium

→ *Page 81*

NEW

GN 526.1
Scale rings
for GN 526
Aluminium

→ *Page 87*

NEW

GN 2422
Cam roller linear guide rails
Steel

→ *Page 103*

Stainless Steel | Ergostyle | Softline | Cleanline | Profile | ATEX | ESD | Inch

New products and Product extensions to Catalogue 15.0

NEW

GN 2424
Cam roller carriages
Aluminium / Steel

→ *Page 104*

GN 717
Indexing plungers
Steel

→ *Page 114*

GN 417
Indexing plungers
with
rest position

→ *Page 119*

NEW

GN 2424.1
Open-end wrenches
Steel

→ *Page 105*

GN 717
Indexing plungers
Stainless Steel

→ *Page 114*

NEW

GN 417.1
Locators
for indexing plungers GN 417
Steel

→ *Page 120*

NEW

GN 2426
Cam rollers
for GN 2422
Steel / Plastic

→ *Page 106*

NEW

GN 817.8
Indexing plungers
removable
Steel

→ *Page 115*

NEW

GN 413
Indexing plungers
Steel

→ *Page 121*

NEW

GN 2428
Wipers
for GN 2422
Plastic / Steel

→ *Page 107*

NEW

GN 817.8
Indexing plungers
removable
Stainless Steel

→ *Page 115*

NEW

GN 413
Indexing plungers
Stainless Steel

→ *Page 121*

NEW

GN 957
Control knobs
for position indicators
Aluminium

→ *Page 112*

NEW

GN 817.1
Indexing plungers
Plunger Stainless Steel

→ *Page 116*

GN 822.7
Mini indexing plungers
Stainless Steel,
Plastic Knob

→ *Page 122*

GN 817
Indexing plungers
Steel /
Plastic knob

→ *Page 113*

NEW

GN 817.9
Indexing plungers
removable
Plunger Stainless Steel

→ *Page 117*

NEW

GN 822.7
Mini indexing plungers
Stainless Steel

→ *Page 122*

GN 817
Indexing plungers
Stainless Steel /
Plastic knob

→ *Page 113*

GN 417
Indexing plungers
without
rest position

→ *Page 118*

NEW

GN 412
Indexing plungers
Zinc die casting /
Plastic knob

→ *Page 123*

Stainless Steel · Ergostyle · Softline · Cleanline · Profile · ATEX · ESD · Inch

New products and Product extensions to Catalogue 15.0

NEW

GN 416
Spring latches
Zinc die casting / Plastic lever

→ *Page 124*

GN 816.1-10
Keys
for locking plungers GN 816.1

→ *Page 128*

NEW

GN 111.6
Retaining rings
Stainless Steel

→ *Page 134*

NEW

GN 416.1
Locators
for GN 416
Zinc die casting

→ *Page 125*

GN 612.3
Cam action indexing plungers
for welding
Steel

→ *Page 130*

NEW

GN 614.5
Spring plungers
press-on type
Plastic / Stainless Steel

→ *Page 135*

GN 816
Locking plungers
Plunger protruded

→ *Page 126*

NEW

GN 612.3
Cam action indexing plungers
for welding
Stainless Steel

→ *Page 130*

GN 1524
Swing bolts
with long threads
Steel

→ *Page 136*

GN 816
Locking plungers
Plunger protruded
with key

→ *Page 126*

GN 612.9
Cam action indexing plungers
with flange for surface mounting

→ *Page 131*

NEW

GN 1524
Swing bolts
with long threads
Stainless Steel

→ *Page 136*

GN 816-10
Keys
for locking plungers GN 816

→ *Page 126*

NEW

GN 612.10
Cam action indexing plungers
with flange for surface mounting

→ *Page 132*

GN 252
Blanking plugs
Steel

→ *Page 137*

GN 816.1
Locking plungers
Plunger retracted

→ *Page 128*

GN 214.3
Locking pins
with axial lock
Stainless Steel / Plastic slide

→ *Page 133*

NEW

GN 252.5
Blanking plugs
Stainless Steel

→ *Page 137*

GN 816.1
Locking plungers
Plunger retracted

→ *Page 128*

NEW

GN 214.6
Locking pins
with axial lock
Stainless Steel / Stainless Steel slide

→ *Page 133*

NEW

GN 6343
Washers / Levelling disks
Stainless Steel

→ *Page 138*

Stainless Steel | Ergostyle | Softline | Cleanline | Profile | ATEX | ESD | Inch

New products and Product extensions to Catalogue 15.0

NEW

GN 6342
Washers
with axial friction bearing
Steel

→ *Page 139*

NEW

GN 6342
Washers
with axial friction bearing
Stainless Steel

→ *Page 139*

DIN 172
Guide bushings
with collar
Steel

→ *Page 140*

DIN 179
Guide bushings
without collar
Steel

→ *Page 140*

NEW

GN 965
Assembly set for profile systems 30 / 40
Steel

→ *Page 142*

NEW

GN 968
Assembly set for profile systems 30 / 40 / 45
Steel

→ *Page 150*

NEW

GN 709.6
Clamping pads
adjustable, with O-Ring
Steel

→ *Page 158*

NEW

GN 709.7
Clamping pads
with O-Ring
Steel

→ *Page 159*

NEW

GN 709.8
Clamping pads
adjustable, with O-Ring
Steel

→ *Page 160*

GN 6311.1
Thrust pads
Steel / Plastic

→ *Page 161*

NEW

GN 355
Levelling elements
Steel

→ *Page 162*

NEW

GN 355
Levelling elements
Stainless Steel

→ *Page 162*

NEW

GN 355.1
Assembly tools
for
levelling elements
Steel

→ *Page 163*

GN 705
Set collars
Steel

→ *Page 164*

GN 705
Set collars
Stainless Steel

→ *Page 164*

GN 706.2
Semi-split set collars
Steel

→ *Page 166*

NEW

GN 706.2
Semi-split set collars
Aluminium

→ *Page 166*

GN 706.2
Semi-split set collars
Stainless Steel

→ *Page 166*

GN 707.2
Split set collars
Steel

→ *Page 167*

NEW

GN 707.2
Split set collars
Aluminium

→ *Page 167*

GN 707.2
Split set collars
Stainless Steel

→ *Page 167*

Stainless Steel | Ergostyle | Softline | Cleanline | Profile | ATEX | ESD | Inch

New products and Product extensions to Catalogue 15.0

NEW

GN 706.4
Semi-split set collars
with adjustable hand lever
Steel
→ *Page 168*

NEW

GN 706.4
Semi-split set collars
with adjustable hand lever
Aluminium
→ *Page 168*

NEW

GN 706.4
Semi-split set collars
with adjustable hand lever
Stainless Steel
→ *Page 168*

GN 704
Quick release set collars
Aluminium
→ *Page 169*

NEW

GN 826
Clamping elements
for adjustable spindles
→ *Page 170*

GN 509.3
Clamp spring washers
Stainless Steel
→ *Page 171*

NEW

GN 509.3
Retaining rings
Steel
→ *Page 171*

GN 509
Ball transfer units
Steel / Stainless Steel
→ *Page 172*

NEW

GN 5860
Load rings
Steel
→ *Page 174*

NEW

GN 1130
Lifting pins
Steel
→ *Page 176*

NEW

GN 1130
Lifting pins
Stainless Steel
→ *Page 176*

NEW

GN 1132
Holding bushings
for lifting pins GN 1130
Stainless Steel
→ *Page 177*

GN 927
Clamping levers with eccentrical cam
Lever Zinc die cast
→ *Page 178*

GN 927
Clamping levers with eccentrical cam
Lever Zinc die cast
→ *Page 178*

GN 927.3
Clamping levers with eccentrical cam
Lever Steel
→ *Page 178*

GN 927.3
Clamping levers with eccentrical cam
Lever Steel
→ *Page 178*

GN 927.4
Clamping levers with eccentrical cam
Stainless Steel,
Lever Zinc die cast
→ *Page 180*

GN 927.4
Clamping levers with eccentrical cam
Stainless Steel,
Lever Zinc die cast
→ *Page 180*

GN 927.5
Clamping levers with eccentrical cam
Lever Stainless Steel
→ *Page 180*

GN 927.5
Clamping levers with eccentrical cam
Lever Stainless Steel
→ *Page 180*

NEW

GN 418.2
Cam point screws
Steel
→ *Page 182*

Stainless Steel | Ergostyle | Softline | Cleanline | Profile | ATEX | ESD | Inch

New products and Product extensions to Catalogue 15.0

GN 810
Vertical clamps
Steel

→ *Page 184*

GN 810
Vertical clamps
Stainless Steel

→ *Page 186*

GN 810.1
Vertical clamps
Steel

→ *Page 188*

GN 810.1
Vertical clamps
Stainless Steel

→ *Page 190*

GN 910
Vertical clamps
heavy duty type
„Longlife“
Steel

→ *Page 192*

GN 910.1
Vertical clamps
heavy duty type
„Longlife“
Steel

→ *Page 194*

GN 910.2
Knee lever modules
to screw-on
Steel

→ *Page 196*

GN 910.3
Knee lever modules
for welding
Steel

→ *Page 198*

GN 910.5
Handles
for knee lever modules
Plastic

→ *Page 198*

GN 910.6
Lever arms
for knee lever modules
Steel

→ *Page 198*

GN 910.7
Clamping arm elongations
for knee lever modules
Steel

→ *Page 198*

GN 910.8
Bushings
for knee lever modules
Steel

→ *Page 198*

GN 910.9
Base plates
for knee lever modules
Steel

→ *Page 198*

GN 910.2
Knee lever modules
to screw-on
Steel

→ *Page 196*

GN 820
Horizontal clamps
Stainless Steel

→ *Page 202*

GN 820.1
Horizontal clamps

→ *Page 204*

GN 820.1
Horizontal clamps
Stainless Steel

→ *Page 206*

GN 844
Plunger clamps
Brass / Steel

→ *Page 208*

GN 852.1
Latch clamps
heavy duty type
Steel

→ *Page 210*

GN 8330
Hook clamps
Steel

→ *Page 212*

GN 8330
Hook clamps
Stainless Steel

→ *Page 212*

GN 820
Horizontal clamps

→ *Page 200*

Stainless Steel | Ergostyle | Softline | Cleanline | Profile | ATEX | ESD | Inch

New products and Product extensions to Catalogue 15.0

NEW

GN 21
Levelling feet
without mounting bore
Stainless Steel

→ *Page 216*

NEW

GN 23
Levelling feet
with mounting bore
Stainless Steel

→ *Page 216*

NEW

GN 30
Levelling feet
Steel

→ *Page 218*

NEW

GN 31
Levelling feet
Stainless Steel

→ *Page 220*

NEW

GN 32
Levelling feet
with fixing lug
Steel

→ *Page 222*

NEW

GN 33
Levelling feet
with fixing lug
Stainless Steel

→ *Page 224*

NEW

GN 40
Levelling feet
without fixing lug
Steel

→ *Page 226*

NEW

GN 42
Levelling feet
with fixing lug
Steel

→ *Page 226*

NEW

GN 41
Levelling feet
without fixing lug
Stainless Steel

→ *Page 228*

NEW

GN 43
Levelling feet
with fixing lug
Stainless Steel

→ *Page 228*

NEW

GN 339
Levelling feet
Steel

→ *Page 235*

NEW

GN 339
Levelling feet
Stainless Steel

→ *Page 235*

GN 115
Latches
operation with operating element, not lockable
Steel

→ *Page 236*

GN 115
Latches
lockable
Steel

→ *Page 238*

GN 115
Latches
Operation with operating element, not lockable
Stainless Steel

→ *Page 240*

NEW

GN 115
Latches
lockable
Stainless Steel

→ *Page 241*

NEW

GN 115.8
Hook-type latches
Operation with key, not lockable

→ *Page 242*

NEW

GN 115.8
Hook-type latches
Operation with operating elements, not lockable

→ *Page 244*

NEW

GN 115.8
Hook-type latches
lockable

→ *Page 245*

NEW

GN 119.3
Latches with cabinet „U“ handle

→ *Page 246*

NEW

GN 115.10
Latches with gripping trays
Lockable

→ *Page 248*

Stainless Steel | Ergostyle | Softline | Cleanline | Profile | ATEX | ESD | Inch

NEW

GN 115.10
Latches with gripping trays
operation with key, not lockable

→ *Page 250*

GN 139.3
Mounting plates
flat
Steel

→ *Page 258*

NEW

GN 138
Hinges
Zinc die casting

→ *Page 262*

GN 702
Stop locks
Zinc die casting

→ *Page 251*

GN 139.4
Mounting plates
Zinc die casting

→ *Page 258*

NEW

GN 151.4
Hinges
Plastic

→ *Page 263*

NEW

GN 720
Stop locks
Zinc die casting

→ *Page 252*

GN 237
Hinges
Zinc die casting

→ *Page 259*

NEW

GN 437
Hinges
with adjustable friction
Zinc die casting

→ *Page 264*

GN 139.1
Hinges with safety switch
Zinc die casting

→ *Page 254*

GN 237
Hinges
Stainless Steel

→ *Page 259*

NEW

GN 159
Hinges
Plastic

→ *Page 266*

GN 139.2
Hinges
without switch
Zinc die casting

→ *Page 254*

GN 237
Hinges
Aluminium

→ *Page 259*

NEW

GN 159.1
Double hinges
Plastic

→ *Page 268*

NEW

GN 139.5
Hinges with safety switch
Stainless Steel

→ *Page 256*

NEW

GN 2370
Spacer plates
Stainless Steel

→ *Page 260*

NEW

GN 233
Hinges
with adjustable friction
Plastic

→ *Page 270*

NEW

GN 139.6
Hinges
without switch
Stainless Steel

→ *Page 256*

NEW

GN 2372
Plates with tapped holes
Stainless Steel

→ *Page 261*

NEW

GN 129.2
Hinges
Steel

→ *Page 272*

Stainless Steel | Ergostyle | Softline | Cleanline | Profile | ATEX | ESD | Inch

New products and Product extensions to Catalogue 15.0

NEW

GN 129.2
Hinges
Stainless Steel
AISI 303

→ *Page 272*

NEW

GN 129.2
Hinges
Stainless Steel
AISI 316L (A4)

→ *Page 272*

NEW

GN 129.3
Hinges
Steel

→ *Page 273*

NEW

GN 129.5
Hinges
Stainless Steel
AISI 303

→ *Page 274*

NEW

GN 129.5
Hinges
Stainless Steel
AISI 316L (A4)

→ *Page 274*

GN 743
Oil level sight glasses
Aluminium / Float glass

→ *Page 275*

GN 743.1
Oil level sight glasses
Aluminium / ESG-glass

→ *Page 275*

GN 743.4
Oil level sight glasses
Stainless Steel / Float glass

→ *Page 276*

GN 743.5
Oil level sight glasses
Stainless Steel / ESG-glass

→ *Page 276*

GN 650.4
Oil level indicators
narrow shape
Plastic

→ *Page 277*

NEW

DIN 908
Threaded plugs
Steel

→ *Page 278*

NEW

DIN 7603
Gaskets
Copper / Aluminium

→ *Page 279*

NEW

GN 7490
Welding sockets
Steel

→ *Page 280*

NEW

GN 548.1
Plugs
Plastic

→ *Page 281*

NEW

GN 7403
Breather strainers
Aluminium

→ *Page 282*

NEW

GN 7403
Breather strainers
Stainless Steel

→ *Page 282*

GN 782
Ball joints
Steel

→ *Page 283*

NEW

GN 648.8
Ball joints
Steel

→ *Page 284*

NEW

GN 648.9
Ball joints
Stainless Steel

→ *Page 285*

NEW

GN 132.5
Two-way connector clamps
Stainless Steel

→ *Page 286*

GN 145
Flanged connector clamps
Aluminium

→ *Page 287*

Stainless Steel | Ergostyle | Softline | Cleanline | Profile | ATEX | ESD | Inch

New products and Product extensions to Catalogue 15.0

GN 145
Flanged connector clamps
Stainless Steel

→ *Page 287*

NEW

GN 296
Installation kits
for position indicator on linear actuators

→ *Page 293*

NEW

GN 490
Twistable two-way clamp mountings
Aluminium

→ *Page 300*

NEW

GN 146.5
Flanged connector clamps
with 4 mount holes
Stainless Steel

→ *Page 288*

GN 297
Bevel gear wheels
for linear actuators / transfer units
Steel

→ *Page 294*

GN 511
Clamping kits
Adjustable
Zinc die casting / Stainless Steel

→ *Page 301*

NEW

GN 146.6
Flanged connector clamps
with 2 mount holes
Stainless Steel

→ *Page 288*

GN 475
Twistable two-way clamp mountings
Aluminium

→ *Page 295*

NEW

GN 511.1
Clamping kits
Zinc die casting / Stainless Steel

→ *Page 302*

NEW

GN 163.5
Base plate connector clamps
Stainless Steel

→ *Page 289*

GN 476
T-Clamp mountings
Aluminium

→ *Page 296*

NEW

GN 3490
Threaded flanges
for profile systems
Steel

→ *Page 303*

NEW

GN 192.5
T-angle connector clamps
Stainless Steel

→ *Page 290*

NEW

GN 482
Swivel clamp mountings
Aluminium

→ *Page 297*

NEW

GN 649
Panel support clamps
Plastic

→ *Page 304*

GN 231
Tube supports
Aluminium

→ *Page 291*

NEW

GN 483
T-Swivel clamp mountings
Aluminium

→ *Page 298*

NEW

GN 649.1
Adapter
for panel support clamps
Plastic

→ *Page 305*

GN 911
Clamping kits
Adjustable
Zinc die casting / Stainless Steel

→ *Page 292*

NEW

GN 484
Attachment clamp mountings
Aluminium

→ *Page 299*

NEW

GN 967
Angle pieces / Shackles
Sheet Steel

→ *Page 306*

Stainless Steel | Ergostyle | Softline | Cleanline | Profile | ATEX | ESD | Inch

NEW

GN 50.6
Retaining magnets
with hook /
with eyelet

→ *Page 307*

NEW

GN 55.1
Raw magnets
with bore or
countersunk

→ *Page 308*

NEW

GN 55.2
Raw magnets

→ *Page 309*

NEW

GN 55.3
Raw magnets

→ *Page 310*

NEW

GN 55.4
Raw magnets

→ *Page 311*

NEW

GN 70
Adhesive disc
for retaining magnets
Steel

→ *Page 312*

NEW

GN 70
Adhesive disc
for retaining magnets
Stainless Steel

→ *Page 312*

Stainless Steel | Ergostyle | Softline | Cleanline | Profile | ATEX | ESD | Inch

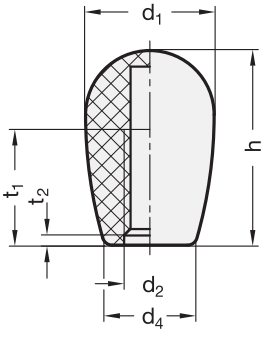

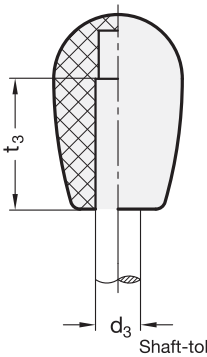

Shaft-tolerance h9

Range extended!

ELESA Original design I.622 / I.622 N

CLEAN

1 d1	2 d2 with thread all colours, not in CL		2 d3 press on type only SW, RT, CL		only SW, RT	d4	h	t1	t2 ±0,5	t3
16	M 6	-	B 6	-	-	12	25	16	3,5	17
20	M 8	-	B 8	-	-	14	32	20	3,5	21
26	-	-	-	-	B 8	17	42	30	5	25
26	M 8	M 10	B 10	-	-	17	42	30	5	30
34	M 10	M 12	B 10	B 12	-	21	54,5	35	8	40

Specification

3

- Plastic
  Technopolymer (Polyamide PA)
  - Specification with thread
    temperature resistant up to 80 °C
  - Specification press on type
    temperature resistant up to 50 °C
- Colour (shiny finish)

black, RAL 9005	SW
orange, RAL 2004	OR
grey, RAL 7035	GR
yellow, RAL 1021	GB
blue, RAL 5024	BL
red, RAL 3000	RT
white, RAL 9002, Cleanline	CL

- *ISO-Fundamental Tolerances → Page 323*
- *Plastic characteristics → Page 331*

Information

Domed gear knobs GN 719.2 are very often used in place of ball knobs DIN 319 for use on gear levers and shafts. Operating knobs are very often chosen for ergonomical reasons.

Domed gear knobs GN 719.2 with bore (B) are mounted by driving them over the shaft with a plastic hammer. A threaded shaft is not required. The shaft end should preferably be slightly rounded or phased (30°).

see also...

- *Product family Cleanline → Main Catalogue Page 13*

Domed gear knob with thread		
GN 719.2-20-M8-SW	1	d_1
	2	d_2
	3	Colour

Domed gear knob press on type		
GN 719.2-34-B10-RT	1	d_1
	2	d_3
	3	Colour

GN 675
without cap

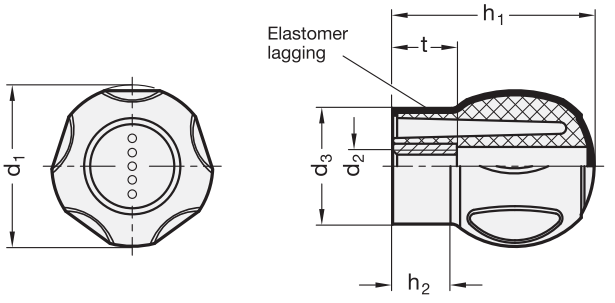

ELESA Original design EBK.-SOFT

SOFT iF product design award

GN 675.1
with cap

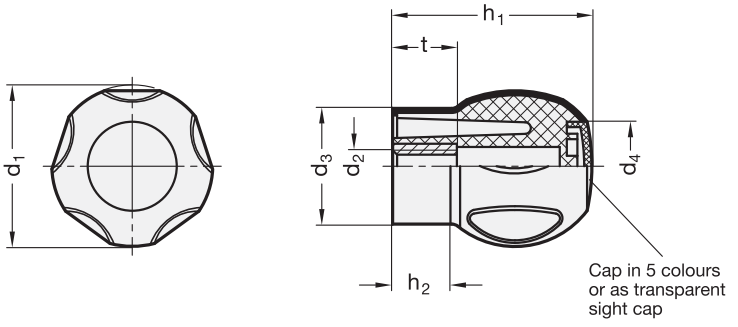

1 d1	2 d2			d3	d4	h1		h2 ≈	t
						GN 675	GN 675.1		
43	M 8	M 10	-	32,5	20	55	53,5	17,5	10
50	M 8	M 10	M 12	37	25	64	60	20	20

Specification

3

- Technopolymer (Polypropylene PP)
  - lagged with a soft elastomer (TPE) 70 Shore A
  - temperature resistant up to 80 °C
  - black-grey, matt, similar RAL 7021
- Softline lagging
  chemically bonded with the plastic body
- Bushing Brass
- Colour of the cap (GN 675.1)

transparent	DTR
orange, RAL 2004	DOR
grey, RAL 7035	DGR
yellow, RAL 1021	DGB
blue, RAL 5024	DBL
red, RAL 3000	DRT

- *Elastomer characteristics → Page 330*
- *Plastic characteristics → Page 331*
- RoHS compliant

Information

The design of the ball handles GN 675 matches the product family of the Ergostyle®. The Softline jacket makes the ball handles particularly ergonomical and safe and easy to handle.

The **soft, slip-proof** contact area improves the contact both in hot (hand sweat) and in dry ambient conditions, in the event of oily surfaces and in very high or very low (freezing) temperatures.

The Softline ball handles are suitable for use both as operating elements and for clamping. The „hard“ plastic core guarantees the perfect anchoring engagement of the threaded bushing, also under heavier loads.

The transparent sight cap allows symbols to be placed underneath.

Softline-Ball handle without cap		
1 2	1	d_1
GN 675-50-M10	2	d_2

Softline-Ball handle with cap		
1 2 3	1	d_1
	2	d_2
GN 675.1-50-M8-DGR	3	Colour of the cap

ELESA Original design EBK.p-SOFT

SOFT | iF product design award

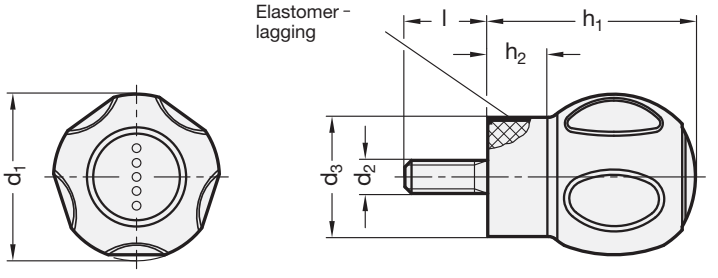

1	2	3						
d_1	**d_2**	Length **l**				**d_3**	**h_1**	**h_2**
43	M 8	16	20	25	30	32,5	55	17,5
43	M 10	20	25	30	50	32,5	55	17,5
50	M 8	16	20	25	30	37	64	20
50	M 10	20	25	30	50	37	64	20

Specification

- Technopolymer (Polypropylene PP)
  - lagged with a soft elastomer (TPE) 70 Shore A
  - temperature resistant up to 80 °C
  - black-grey, matt, similar RAL 7021
- Softline lagging chemically bonded with the plastic body
- Threaded shaft Steel zinc plated, blue passivated
- *Elastomer characteristics* → *Page 330*
- *Plastic characteristics* → *Page 331*
- RoHS compliant

On request

- Revolving Softline-Ball handles

Information

The design of the ball handles GN 675 matches the product family of the Ergostyle®. The Softline jacket makes the ball handles particularly ergonomical and safe and easy to handle.

The **soft, slip-proof** contact area improves the contact both in hot (hand sweat) and in dry ambient conditions, in the event of oily surfaces and in very high or very low (freezing) temperatures.

The Softline ball handles are suitable for use both as operating elements and for clamping. The „hard“ plastic core guarantees the perfect anchoring engagement of the threaded bushing, also under heavier loads.

see also...

- *Product family Ergostyle®* → *Main Catalogue Page 12*
- *Product family Softline®* → *Main Catalogue Page 12*

How to order

1 2 3

GN 675-50-M10-25

1	**d_1**
2	**d_2**
3	**Length l**

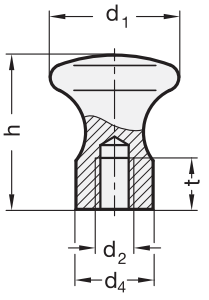

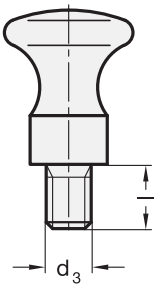

Rost frei — Inox Stainless Steel

3 Type

D with female thread
E with threaded rod

1 d_1	2 d_2 Type D	2 d_3 Type E	d_4	h	Length l	t min.
16	M 5	M 6	10	18	10	7
20	M 6	M 8	12	24	12	9
25	M 6	M 8	14	29	14	9
32	M 8	M 10	18	37	16	12
36	M 10	M 12	20	42	18	15

* usually not available from stock, requires a minimum order quantity

Specification

4

- **GN 75**
  Steel
  - fine turned
  - blackend
- **GN 75.5**
  Stainless Steel
  - AISI 304
  - matt shot-blasted **MT**
  - highly polished **PL** *
- *Stainless Steel characteristics → Page 334*
- RoHS compliant

On request

- Steel, zinc plated
- Stainless Steel (A4 quality)

Information

Waist shaped knobs GN 75 boast a compact and timeless design.

Waist shaped knobs GN 75.5 are made of high-grade stainless steel which makes them the first choice when it comes to applications requiring high standards of hygiene. The favourably designed and non-scooped geomtery helps to prevent damp and the related risk of dirt collecting.

see also...

- *Knobs GN 676.1 (Steel, blackened) → Page 51*
- *Stainless Steel-Knobs GN 676.5 → Page 51*

Waist shaped knob		
1 2 3 GN 75-25-M6-D	1	d_1
	2	d_2 (d_3)
	3	Type

Waist shaped Stainless Steel-Knobs		
1 2 3 4 GN 75.5-25-M8-E-MT	1	d_1
	2	d_3 (d_2)
	3	Type
	4	Finish

GN 565 Cabinet „U“ handles

Aluminium

Range extended!

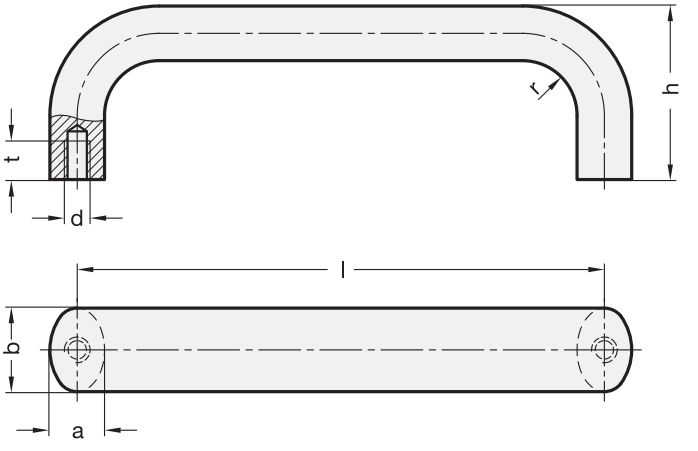

Inch

Internationaler Designpreis Baden-Württemberg

1 b	2 Length l ±0,25						a	d	h	r	t min.
20	100	112	117	120*	-	-	13	M 6	49	13	10
20	128	160	180*	200	235*	-	13	M 6	51	13	10
26	112	117	120	125	128	160	17	M 8	55	17	12
26	179	192	300	400	500	-	17	M 8	57	17	12

* suitable for 19“ rack and enclosure layout

Specification

3

- Aluminium
  - plastic coated
    black, RAL 9005, textured finish — SW
    red, RAL 3000, textured finish — RS
    silver, RAL 9006, textured finish — SR
  - anodized, natural colour — EL
  - blank
    tumbled — BL
- *Load rating information → Page 342*
- RoHS compliant

Information

Cabinet „U“ handles GN 565 are produced from profiled aluminum extrusions. Their special features are their rigidity and ergonomical shaping.

The manufacturing process (bending) allows the production of **special lengths** in relatively small quantities.

see also...

- *Inclined Cabinet „U“ handles GN 565.2 → Main Catalogue Page 64*
- *Stainless Steel-Cabinet „U“ handles GN 565.5 → Page 32*
- *Cabinet „U“ handles GN 725 (Plastic) → Main Catalogue Page 68*

How to order

1 2 3

GN 565-20-100-SW

1	b
2	Length l
3	Finish

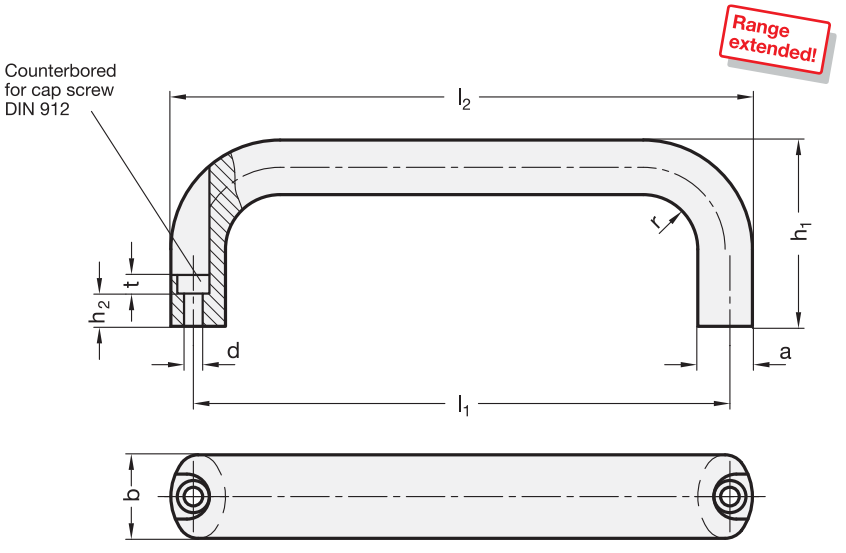

1 b	2 l_1 ±0,25	a	d	h_1	h_2	l_2	r	t
20	100	13	5,4	49	13,5	112	13	5,5
20	112	13	5,4	49	13,5	124	13	5,5
20	120	13	5,4	49	13,5	132	13	5,5
20	128	13	5,4	51	13,5	140	13	5,5
20	160	13	5,4	51	13,5	172	13	5,5
26	116	17	6,4	55	11	130	17	6
26	120	17	6,4	55	11	134	17	6
26	132	17	6,4	55	11	146	17	6
26	164	17	6,4	57	11	178	17	6
26	179	17	6,4	57	11	193	17	6
26	196	17	6,4	57	11	210	17	6

Specification

3

- Aluminium
  - plastic coated
    black, RAL 9005, textured finish **SW**
    red, RAL 3000, textured finish **RS**
    silver, RAL 9006, textured finish **SR**
  - anodized, natural colour **EL**
  - blank
    tumbled **BL**

- *Load rating information → Page 342*
- RoHS compliant

Information

Cabinet „U“ handles GN 565.1 are produced from profiled aluminum extrusions. Their special features are their rigidity and ergonomical shaping.

The manufacturing process (bending) allows the production of **special lengths** in relatively small quantities.

see also...

- *Assembly sets for profile systems GN 965 → Page 148*
- *Assembly sets for profile systems GN 968 → Page 156*

How to order

1 2 3

GN 565.1-26-132-SW

1	b
2	l_1
3	Finish

GN 565.5 Stainless Steel-Cabinet „U“ handles

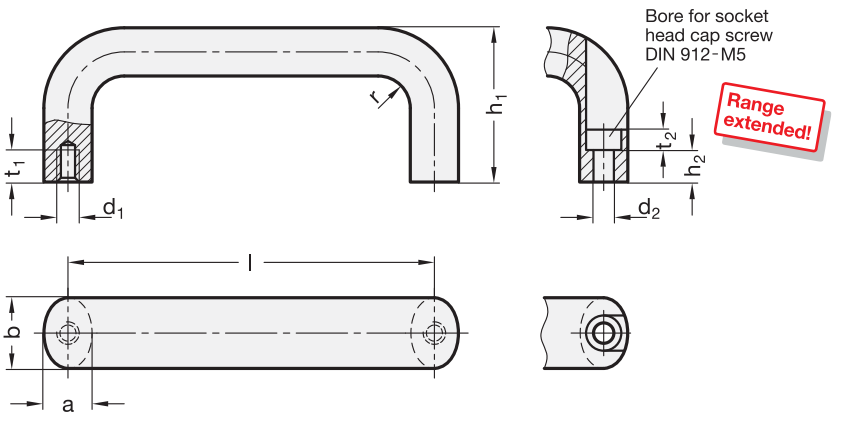

Inox
Stainless
Steel

3 Type

A Mounting from the back (threaded blind bore)

B Mounting from the operator's side

1 b	2 Length l ±0,25 Type A	Type B	a	d_1	d_2	h_1	h_2	r	t_1 min.	t_2
20	112	112	13	M 6	5,4	49	13,5	13	10	5,5
20	128	128	13	M 6	5,4	51	13,5	13	10	5,5
20	160	160	13	M 6	5,4	51	13,5	13	10	5,5
20	200	-	13	M 6	-	51	-	13	10	-
20	250	-	13	M 6	-	51	-	13	10	-
20	300	-	13	M 6	-	51	-	13	10	-
20	350	-	13	M 6	-	51	-	13	10	-
20	400	-	13	M 6	-	51	-	13	10	-

Specification

- Stainless Steel
  - Type A: AISI 304
  - Type B: Fine die casting, AISI CF-8
  - matt shot-blasted
- *Stainless Steel characteristics* → *Page 334*
- *Load rating information* → *Page 343*
- RoHS compliant

Information

The special features of Stainless Steel-Cabinet „U“ handles GN 565.5 are their rigidity and ergonomical shaping.

Stainless Steel-Cabinet „U“ handles (Type A) are produced from profiled aluminum extrusions. The manufacturing process (bending) allows the production of **special lengths** in relatively small quantities.

see also...

- *Cabinet „U“ handles GN 565 (Aluminium)* → *Page 30*
- *Cabinet „U“ handles GN 725 (Plastic)* → *Main Catalogue Page 68*
- *Cabinet „U“ handles GN 625 (Plastic)* → *Main Catalogue Page 66*

How to order

1 2 3

GN 565.5-20-112-A

1	b
2	Length l
3	Type

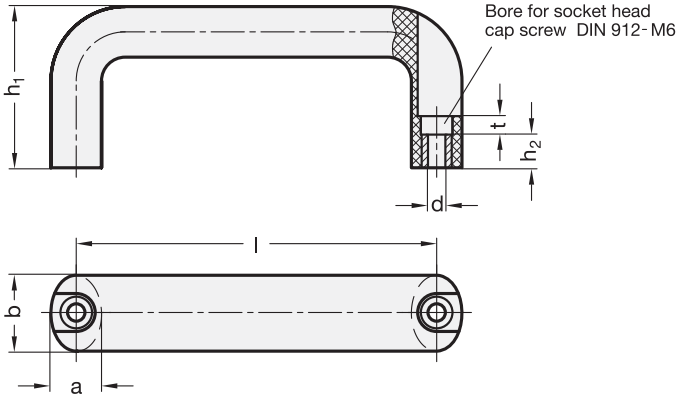

ELESA Original design M.643 FM

[1]

Length **l**	**a**	**b**	**d**	**h_1**	**h_2**	**t**
117 ±0,5	15	25	6,4	49	15	6
179 ±1	16	27	6,4	57	15	6

Specification

- Plastic
  Technopolymer (Polypropylene PP)
  - shock-resistant
  - temperature resistant up to 100 °C
  - black, matt finish
- Bushing
  Brass
- *Plastic characteristics* → *Page 331*
- *Strength properties* → *Page 337*
- RoHS compliant

Information

Cabinet „U“ handles GN 725.1 are known for their good design and the well proven eliptical profile. They meet the demand from an ergonomical angle.

see also...

- *Cabinet „U“ handles GN 565.1 (Aluminium)* → *Page 31*

How to order		
GN 725.1-179 [1]	1	**Length l**

GN 565.7 Inclined Stainless Steel-Cabinet „U“ handles

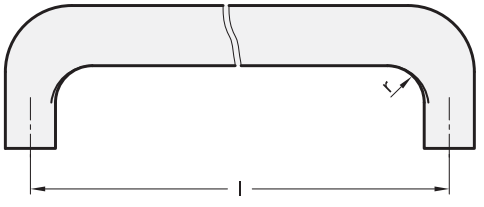

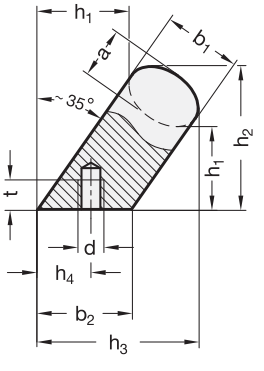

Inox Stainless Steel

3 Type

A Mounting from the back (threaded blind bore)

1 b_1	2 Length l ±0,25	a	b_2	d	h_1	h_2	h_3	h_4 +1	r	t min.
20	112	13	24	M 6	32	48	50	13,5	13	10
20	128	13	24	M 6	32	48	50	13,5	13	10

Specification

4

- Stainless Steel
  - AISI 304
  - matt shot-blasted MT
- *Stainless Steel characteristics* → *Page 334*
- RoHS compliant

Information

Inclined Stainless Steel-Cabinet „U“ handles GN 565.7 are produced from profiled Stainless Steel extrusions. Their special features are their rigidity and ergonomical shaping.

The angled contact surface allows improved access even in tight spaces such as corners.

The manufacturing process (bending) allows the production of **special lengths** in relatively small quantities.

How to order

1 2 3 4

GN 565.7-20-128-A-MT

1	b_1
2	Length l
3	Type
4	Finish

Range extended!

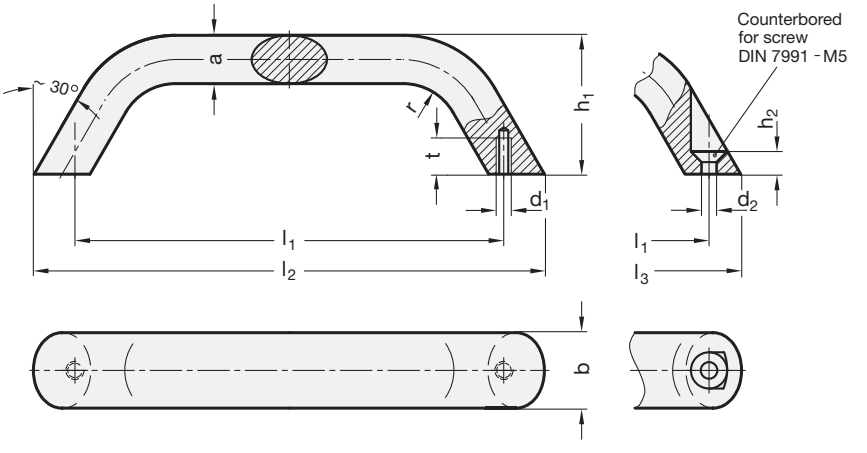

3 Type

A Mounting from the back (threaded blind bore)

B Mounting from the operator‘s side

1 b	2 l_1 ±0,25	l_2 Type A	l_3 ≈ Type B	a	d_1 Type A	d_2 Type B	h_1	h_2 Type B	r	t min.
20	120	142	137	13	M 5	5,3	41	5	13	10
20	160	182	177	13	M 5	5,3	45	5	13	10

Specification

4

- Aluminium
  - plastic coated
    black, RAL 9005, textured finish **SW**
    silver, RAL 9006, textured finish **SR**
  - blank
    tumbled **BL**
- *Load rating information → Page 343*
- RoHS compliant

Information

Cabinet „U“ handles GN 565.3 are suitable for applications where lower lifting forces are required such as on lids or protective machine covers.

The countersunk holes of type B allow fixing with self tapping screws or countersunk rivets.

The manufacturing process (bending) allows the production of **special lengths** in relatively small quantities.

How to order

1 2 3 4

GN 565.3-20-120-B-SW

1	b
2	l_1
3	Type
4	Finish

GN 426.6 Stainless Steel-Cabinet „U“ handles

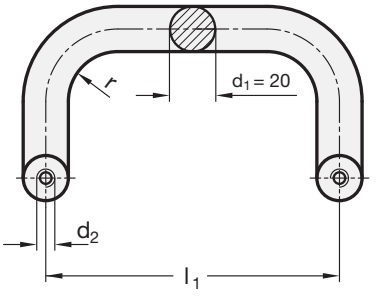

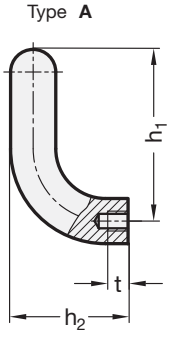

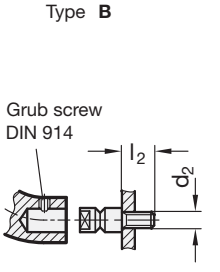

Inox Stainless Steel

3 Type

A Mounting from the back (threaded blind bore)

B Mounting from the operator`s side

1 d_1	2 l_1 ±0,5 Type A	±0,3 Type B Threaded bore for mounting stud	d_2	h_1	h_2	l_2	r	t
20	200	200	M 8	105	68	20	22	15
20	300	300	M 8	105	68	20	22	15

Specification

- Stainless Steel
  - AISI 304
  - matt shot-blasted
- Threaded bushing / Mounting stud Stainless Steel AISI 303
- Grub screw DIN 914-M5-6-NI
- *Stainless Steel characteristics* → *Page 334*
- RoHS compliant

Information

Stainless Steel-Cabinet „U“ handles GN 426.6 can be mounted from the back (type A) as well as from the operator's side (type B). In this case the stud is first screwed in from the machine side and then the handle is pushed on and secured with the grub screw.

Both mounting methods allow the mounting of a pair of handles in opposite position. This method could be used e.g. on doors (double handle). In general, a mounting stud with special length l_2 might be required.

The manufacturing process (bending) allows the production of **special lengths** in relatively small quantities.

see also...

- *Cabinet „U“ handles GN 425.1 (Aluminium / Stainless Steel, angled)* → *Main catalogue page 86*

How to order

1 2 3

GN 426.6-20-300-A

1	d_1
2	l_1
3	Type

GN 426.5 Stainless Steel-Cabinet „U“ handles

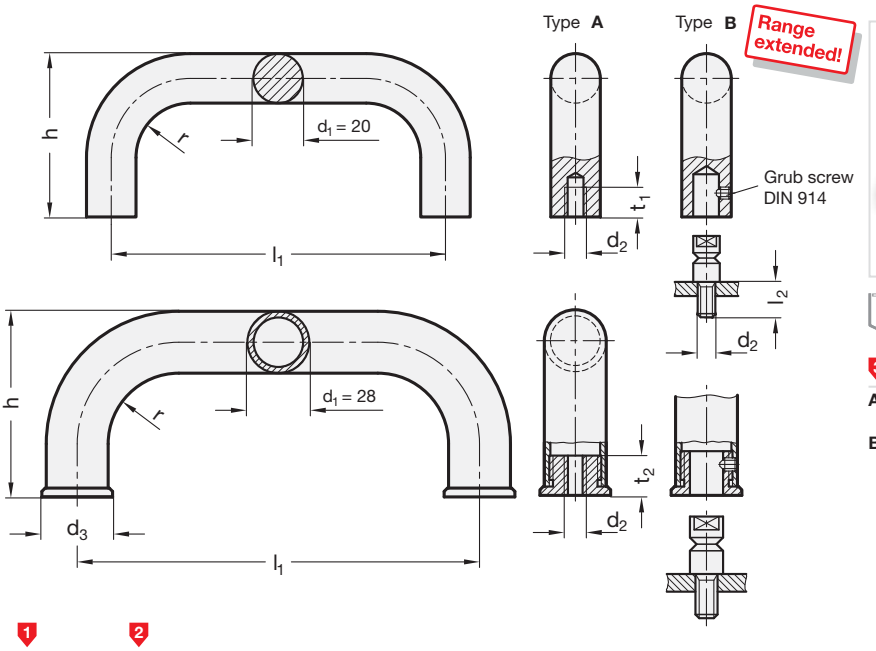

Inox Stainless Steel

3 Type

A Mounting from the back (threaded blind bore)

B Mounting from the operator`s side

1 d_1	2 l_1 ±0,5 Type A	±0,3 Type B Threaded bore for mounting stud	d_2	d_3	h	l_2	r ≈	t_1	t_2
20	200	200	M 8	-	68	20	22	15	-
20	250	250	M 8	-	68	20	22	15	-
20	300	300	M 8	-	68	20	22	15	-
20	350	350	M 8	-	68	20	22	15	-
28	250	250	M 10	32	90	20	32	-	17
28	300	300	M 10	32	90	20	32	-	17
28	350	350	M 10	32	90	20	32	-	17
28	400	400	M 10	32	90	20	32	-	17

Specification

- Stainless Steel
  d_1 = 20: Solid material
  d_1 = 28: Tube-Ø 28 x 2
  - AISI 304
  - matt shot-blasted
- Threaded bushing / Mounting stud
  Stainless Steel AISI 303
- Grub screw (Type B)
  d_1 = 20: DIN 914-M5-6-NI
  d_1 = 28: DIN 914-M6-8-NI
- *Stainless Steel characteristics* → *Page 334*
- *Load rating information* → *Page 342*
- RoHS compliant

Information

Stainless Steel-Cabinet „U“ handles GN 426.5 can be mounted from the back (type A) as well as from the operator's side (type B). In this case the stud is first screwed in from the machine side and then the handle is pushed on and secured with the grub screw.

Both mounting methods allow the mounting of a pair of handles in opposite position. This method could be used e.g. on doors (double handle). In general, a mounting stud with special length l_2 might be required.

The manufacturing process (bending) allows the production of **special lengths** in relatively small quantities.

see also...

- *Cabinet „U“ handles GN 426 (Aluminium)* → *Main Catalogue Page 92*
- *Stainless Steel-Tubular handles GN 666.5 / GN 666.7* → *Main Catalogue Page 112*

How to order

1 2 3

GN 426.5-28-400-A

1	d_1
2	l_1 (l_2)
3	Type

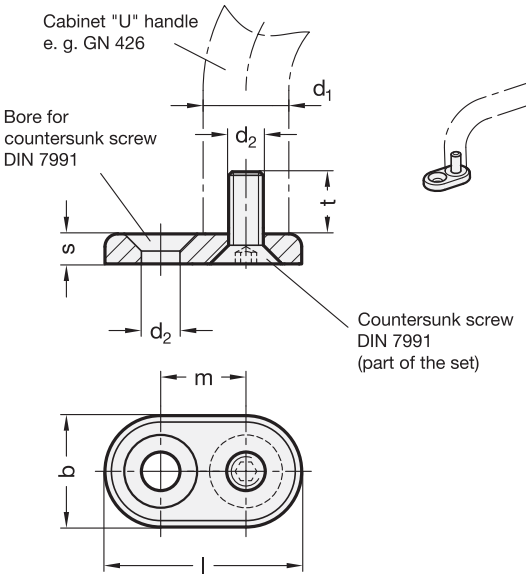

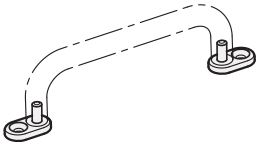

2 d_1	3 d_2	b	d_3 $^{+0,2}_{+0,5}$	Length l	m	s	t	Countersunk screw DIN 7991	for cabinet „U“ handles
8	M 4	10	4	20	10	3	7	M 4 x 10	GN 425-8-...
10	M 5	12	5	24	12	4	8	M 5 x 12	GN 425-10-... / GN 425.1-10-...
12	M 6	14	6	26	12	4	10	M 6 x 14	GN 425-12-... / GN 425.1-12-...
16	M 6	18	6	34	16	4,5	9,5	M 6 x 14	GN 425-16-...
20	M 6	22	6	40	18	4,5	9,5	M 6 x 14	GN 565-20-... / GN 565.5-20-...
20	M 8	22	8	42	20	6	12	M 8 x 18	GN 426-20-... / GN 426.1-20-...
26	M 8	28	8	52	24	6	12	M 8 x 18	GN 565-26-...
28	M 10	30	10	56	26	6,5	13,5	M 10 x 20	GN 426-28-... / GN 426.1-28-...

Specification

1 4

- Zinc die casting ZD
  plastic coated
  black, RAL 9005, textured finish ● SW
  silver, RAL 9006, textured finish ○ SR
- Countersunk screws
  DIN 7991
  Steel zinc plated, blue passivated
- RoHS compliant

Information

Fastening sets GN 181 make it possible to mount different cabinet „U“ handles and tubular handles with internal thread from the operator‘s side.

The mounting position of the fastening plates is freely customizable, allowing a sideways offset or mounting with different drillhole spacings.

A fastening set consists of 2 fastening plates and 2 countersunk screws.

see also...
- *Assembly sets for profile systems 30 / 40 GN 965 → Page 145*
- *Assembly sets for profile systems 30 / 40 / 45 GN 968 → Page 153*

How to order

1 2 3 4
GN 181-ZD-28-M10-SW

1	**Material**
2	**d_1**
3	**d_2**
4	**Finish**

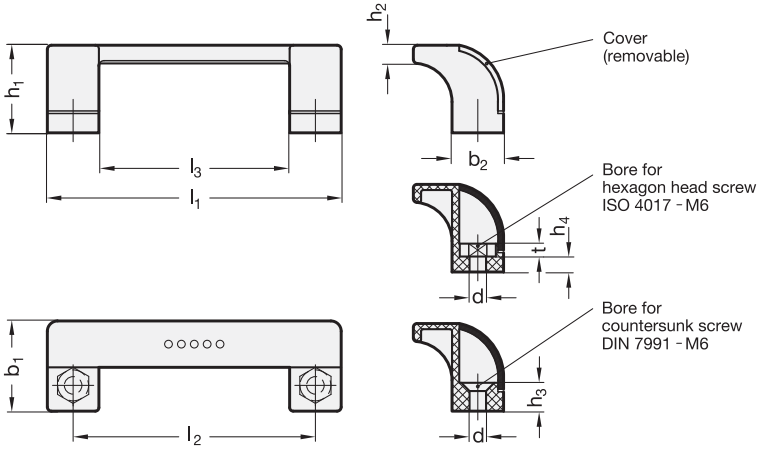

ELESA original design EWP.

iF product design award

2 Type

A Fixing with hexagon screw

B Fixing with countersunk screw

1

l_1	l_2 ±0,5	l_3	b_1	b_2	d	h_1	h_2	h_3	h_4	t
114	93,5	74	35	19	6,5	33	7	11	9	5

Specification

3

- Plastic
  Technopolymer (Polyamide PA)
  - glass fibre reinforced
  - temperature resistant up to 110 °C
  - black-grey, matt
    similar to RAL 7021
- Colour of the covers (shiny):

black-grey, RAL 7021	DSG
orange, RAL 2004	DOR
grey, RAL 7035	DGR
yellow, RAL 1021	DGB
blue, RAL 5024	DBL
red, RAL 3000	DRT

- Plastic characteristics → Page 331

Information

The design of the GN 630.1 cabinet „U“ handles matches the product family of Ergostyle®.

A typical application is on double swing doors on machine shrouds or fixtures.

The covers shroud the two fixing screws of the cabinet „U“ handle.

The covers are supplied loose.

see also...
- *Product family Ergostyle® → Main Catalogue Page 12*
- *Assembly sets for profile systems 30 / 40 GN 965 → Page 148*
- *Assembly sets for profile systems 30 / 40 / 45 GN 968 → Page 156*

How to order

1 2 3

GN 630.1-114-A-DOR

1	l_1
2	Type
3	Colour of the covers

GN 423 „U“ handles

for 19“ rack and enclosure layout

Type **A**

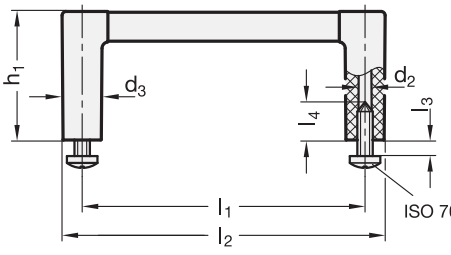

Type **B**

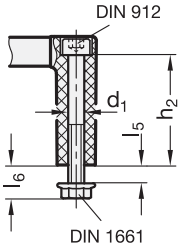

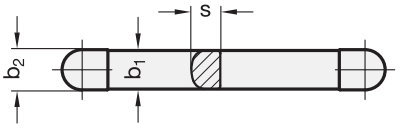

iF product design award

3 Type

A Mounting from the back (Self-tapping screws)

B Mounting from the operators side

1 b_1	2 l_1 ±0,25	b_2	d_1	d_2	d_3	h_1	h_2	l_2	l_3 max.	l_4 min.	l_5 max.	l_6	s	HE
12	55	12,5	M 5	4,3	12,5	40	34,5	67,5	5	14	5	10,5	9	2
12	88	12,5	M 5	4,3	12,5	40	34,5	100,5	5	14	5	10,5	9	3
12	100	12,5	M 5	4,3	12,5	40	34,5	112,5	5	14	5	10,5	9	3
12	120	12,5	M 5	4,3	12,5	40	34,5	132,5	5	14	5	10,5	9	4
12	180	12,5	M 5	4,3	12,5	40	34,5	192,5	5	14	5	10,5	9	5
12	235	12,5	M 5	4,3	12,5	40	34,5	247,5	5	14	5	10,5	9	6

Specification

4

- Handle bar
  Aluminium
- Handle shanks
  Plastic (Polyamide PA)
  - glas fibre reinforced
  - temperature resistant up to 130 °C
- Handle bar **ELS**
  anodized, natural colour
  Handle shanks
  black, matt
- Handle bar **ESS**
  anodized, black
  Handle shanks
  black, matt
- Handle bar **ELG**
  anodized, natural colour
  Handle shanks
  light grey, matt
- Cylinder head screws DIN 912-M5-45
  Steel zinc plated, black
- Flange nuts DIN 1661-M5
  Steel zinc plated, blue passivated
- Self-tapping screws ISO 7049
  Steel zinc plated ST4,8-19
- RoHS compliant

Information

The dimensisons of the „U“ handles GN 423 have been designed to match a 19“ rack and enclosure layout.

The values of the height unit HE given in the table refer to the corresponding front panel heights of the housings.

Handle bar and handle shanks are interconnected via a plug-type connection, with the effect that special lengths are easily realised.

Thanks to the fixing screws included in the set, the „U“ handles are easily and economically mounted.

see also...

- *Cabinet „U“ handles GN 425* → *Main Catalogue Page 80*
- *Cabinet „U“ handles GN 425.6* → *Main Catalogue Page 80*
- *Cabinet „U“ handles GN 427* → *Main Catalogue Page 91*
- *Stainless Steel-Cabinet „U“ handles GN 427.5*
  → *Main Catalogue Page 91*

How to order

1 2 3 4

GN 423-12-120-A-ELS

1	b_1
2	l_1
3	Type
4	Finish

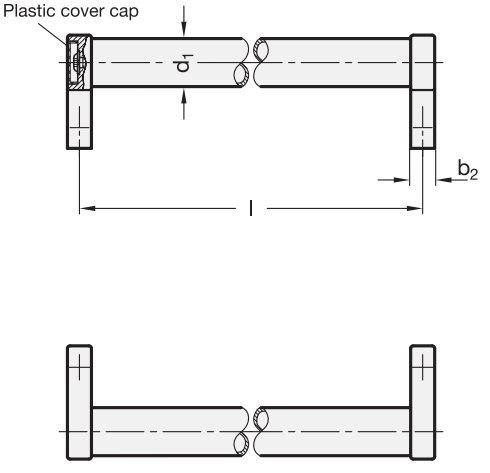

3 Type

A Mounting from the back (threaded blind bore)

B Mounting from the operator's side (only for d1=28)

1 d1	2 Länge l ±0,25							d2	b1	b2	b3	b4	h1	h2	t min.
20	180	200	250	300	350	400	-	M 6	24	12	42	54	42	54	12
28	200	250	300	350	400	500	600	M 8	25	14	50	66	50	66	15
30	200	300	350	400	500	600	1000	M 8	27	17	51	68	51	68	15

Specification

4

- Handle tube
  Aluminium (wall thickness 1,5)
- Handle shanks
  Zinc die casting
- Tube **SW**
  plastic coated
  black, RAL 9005, textured finish
  Handle shanks plastic coated
  black, RAL 9005, textured finish
- Tube, anodized, natural colour **EL**
  Handle shanks plastic coated
  black, RAL 9005, textured finish
- Tube, anodized, natural colour **ES**
  Handle shanks plastic coated
  silver, RAL 9006, textured finish
- Cover caps plastic, light grey
- Cap (Type B)
  Plastic (Technopolymer)
  black (for SW / EL)
  light grey (for ES)
- Socket head cap screw ISO 7380-M6-20
  Steel, black zinc plated
- Hexagon nuts ISO 4032-M6
  Steel, zinc plated
- Washers DIN 125
  Steel, zinc plated
- *Load rating information → Page 338*
- RoHS compliant

Information

The handle tube of the GN 333 tubular handles can be screwed to the handle bases without further machining or processing, allowing **special lengths** to be realised easily.

A typical application area for tubular handles GN 333 are double-winged doors at machines or devices.

see also...

- *Tubular handles GN 333.1 (straight) → Main Catalogue Page 96*
- *Tubular handles GN 332 (with power switching function) → Main Catalogue Page 106*
- *Assembly sets for profile systems 30 / 40 GN 965 → Page 145*
- *Assembly sets for profile systems 30 / 40 / 45 GN 968 → Page 153*

How to order

1 2 3 4

GN 333-28-600-A-EL

1	d_1
2	Length l
3	Type
4	Finish

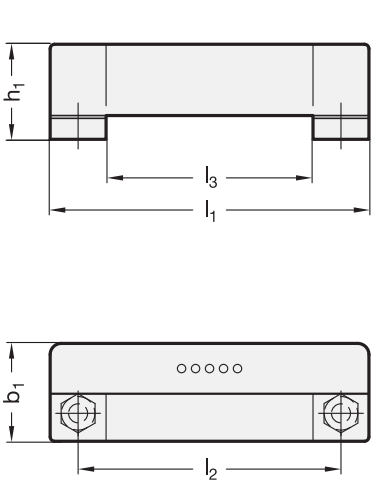

ELESA Original design ESP.

iF product design award

2 Type

A Fixing with hexagon screw

B Fixing with countersunk screw

1

l_1	l_2 ±0,5	l_3	b_1	b_2	d	h_1	h_2	h_3	h_4	t
114	93,5	74	35	19	6,5	33	7	11	9	5

Specification

3

- Plastic
  Technopolymer (Polyamide PA)
  - glass fibre reinforced
  - temperature resistant up to 110 °C
  - black grey, matt
    similar to RAL 7021
- Colour of the cover (shiny):

black-grey, RAL 7021	DSG
orange, RAL 2004	DOR
grey, RAL 7035	DGR
yellow, RAL 1021	DGB
blue, RAL 5024	DBL
red, RAL 3000	DRT

- *Plastic characteristics → Page 331*

Information

The design of the GN 630 cabinet „U“ handles matches the product family of Ergostyle®.

A typical application for ledge handles GN 630 is on double swing doors on machine shrouds or fixtures.

The ledge handles are protection for the operator’s fingers. At the same time they shroud the two fixing screws of the ledge handle.

The cover is supplied loose.

see also...

- *Product family Ergostyle® → Main Catalogue Page 12*
- *Assembly sets for profile systems 30 / 40 GN 965 → Page 148*
- *Assembly sets for profile systems 30 / 40 / 45 GN 968 → Page 156*

How to order

1 2 3

GN 630-114-B-DOR

1	l_1
2	Type
3	Colour of the cover

GN 825.1 Folding handle

with spring-loaded return

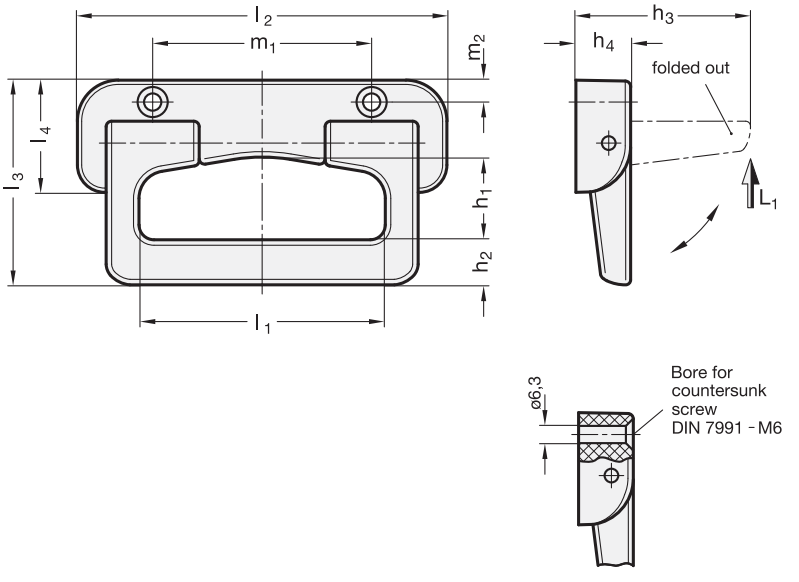

ELESA original design MPE.

1

l_1	h_1	h_2	h_3	h_4	l_2	l_3	l_4	m_1 ±0,1	m_2	L_1 Load-bearing capacity in N folded out
90	29	16,5	63	20	135	74	41	80	8	1700

Specification

2

- Plastic
  Polyamide PA
  - glasfibre reinforced
  - temperature resistant up to 100 °C
  - black, RAL 9005, matt ● SW
- Pin
  Stainless Steel AISI 303
- Return spring
  Stainless Steel AISI 302
- RoHS compliant

Information

Folding handle GN 825.1 are used in places where the handle must not protrude.

After releasing the handle, it returns to its starting position by spring-loaded return.

The value for the load-bearing capacity given in the table is an approximate value which, when exceeded, may cause the plastic to break. The value has been determined during tests at room temperature.

see also...

- *Folding handles GN 425.5 → Main Catalogue Page 90*
- *Folding handles GN 425.2 → Main Catalogue Page 87*
- *Folding handles with recessed tray GN 825.2 → Page 44*

How to order		
GN 825.1-90-SW (1 2)	1	l_1
	2	Colour

GN 825.2 Folding handle with recessed tray

with spring-loaded return

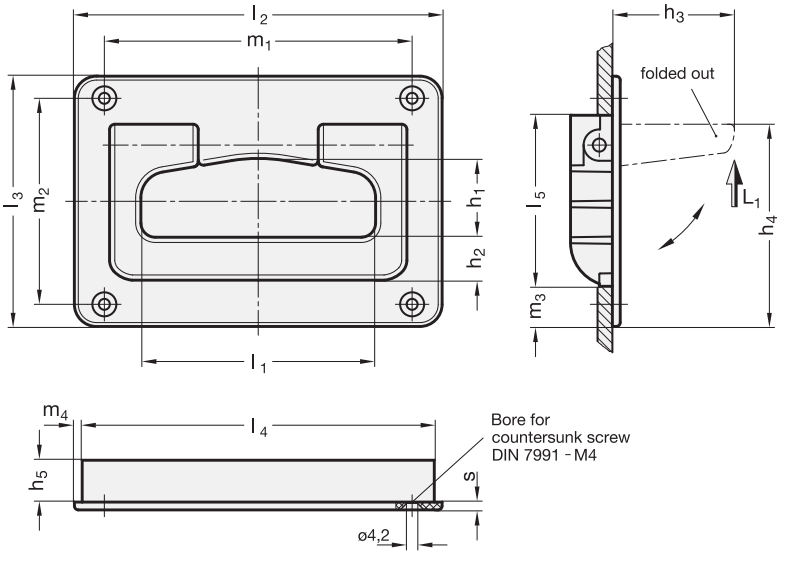

ELESA original design MPR.

1

l_1	h_1	h_2	h_3	h_4	h_5	l_2	l_3	l_4	l_5	m_1 ±0,1	m_2 ±0,1	m_3	m_4	s	L_1 Load-bearing capacity in N folded out
90	29	16,5	47	77	16	141	96	135	65	118	79	16	3	3	1650

Specification

2

- Plastic
  Polyamide PA
  - glasfibre reinforced
  - temperature resistant up to 100 °C
  - black, RAL 9005, matt ● SW
- Pin
  Stainless Steel AISI 303
- Return spring
  Stainless Steel AISI 302
- RoHS compliant

Information

The folding handle with recessed tray GN 825.2 are used if the handle is to protrude by a maximum of 3 mm when folded down.

After releasing the handle, it returns to its starting position by spring-loaded return.

The value for the load-bearing capacity given in the table is an approximate value which, when exceeded, may cause the plastic to break. The value has been determined during tests at room temperature.

see also...

- *Folding handles with recessed tray GN 425.8*
  → *Main Catalogue Page 88*
- *Folding handles GN 825.1 → Page 43*

How to order		
GN 825.2-90-SW (1 2)	1	l_1
	2	Colour

Folding handle with recessed tray GN 825.2
Folding handle GN 825.1 → *Page 43*

Installation dimensions

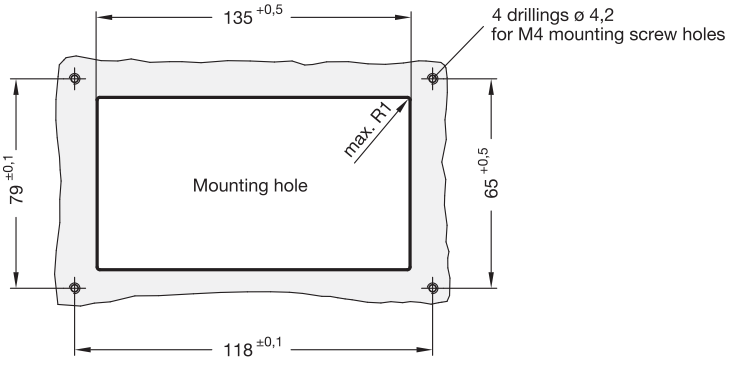

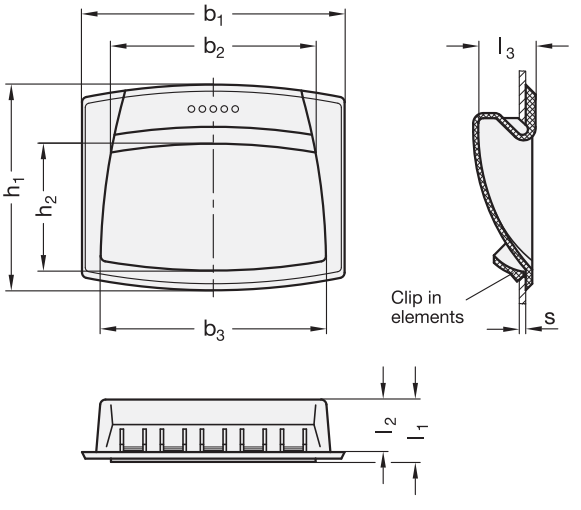

ELESA Original design EPR-PF

iF product design award

1

b_1	b_2	b_3	h_1	h_2	l_1	l_2	l_3	F_1 in N	F_2 in N
90	76	79	50	28	19	17	17,5	1800	500
110	91	96	73	42	24	20	21,5	1300	400
120	94	103	95	58	28,5	24	26,5	1000	250

Specification

2

- Plastic
  Technopolymer (Polyamide PA)
  - glass fibre reinforced
  - temperature resistant up to 80 °C
- Farbe (matte):
  black-grey, RAL 7021 ● SG
  white, RAL 9002, Cleanline, matt ○ CL
- *Plastic characteristics → Page 331*
- RoHS compliant

On request

- in self-extinguishing plastic (SV)

Information

The design of the GN 731 gripping trays matches the product family of Ergostyle®.

There are no mounting screws required.

The values of the load capacities F_1 and F_2 were tested with wall thickness s = 1,5.

see also...

- *Product family Ergostyle® → Main Catalogue Page 12*
- *Product family Cleanline → Main Catalogue Page 13*

How to order		
GN 731-120-SG (1 2)	1	b_1
	2	Colour

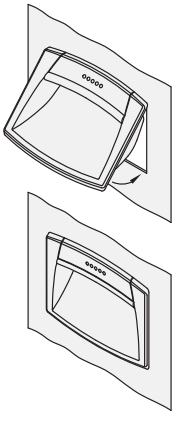

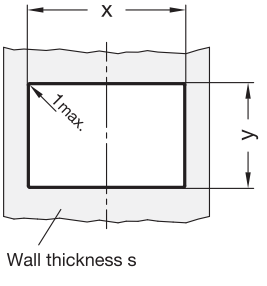

Mounting information

1) Drill the handle housing according to the template dimensions reported in the table.
2) Remove all drilling burrs before fitting the handle.
3) Fit the upper part of the handle into the housing.
4) Press onto the lower part until the handle is completely inserted.

s Wall thickness	**x** +0,2 for b_1 = 90	**y** ±0,1	**x** ±0,2 for b_1 = 120	**y** ±0,1	**x** +0,2 for b_1 = 120	**y** ±0,1
0,7 ... 0,8	85	34,9	107,5	70,6	107,5	70,5
> 0,8 ... 1,2	85	35,1	107,5	70,9	107,5	70,8
> 1,2 ... 1,5	85	36,1	107,5	71,1	107,5	71,2
> 1,5 ... 2	85	36,1	107,5	71,3	107,5	71,5
> 2 ... 2,2	85	36,1	107,5	71,6	107,5	71,5

Range extended!

ELESA Original design PR-PF

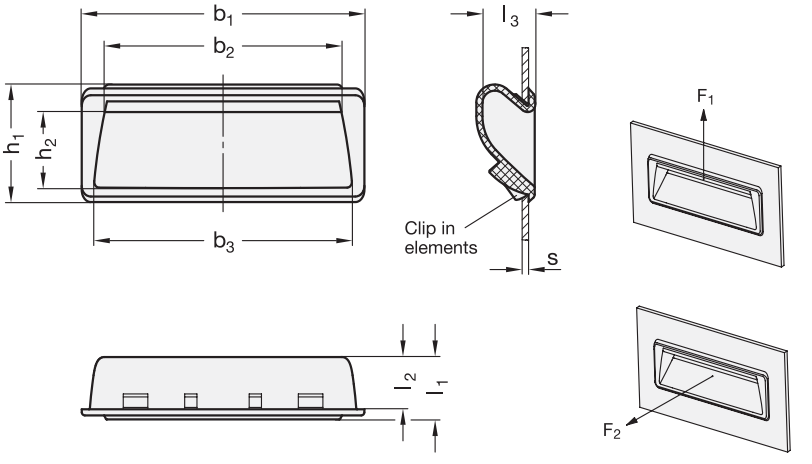

1

b_1	b_2	b_3	h_1	h_2	l_1	l_2	l_3	F_1 in N	F_2 in N
92	76	83	37	25	19	17	17,4	1800	500
137	122	128	37	25	19	17	17,4	1800	500

Specification

2

- Plastic
  Technopolymer (Polyamide PA)
  - glass fibre reinforced
  - temperature resistant up to 80 °C
- Colour (matt):
  black-grey, RAL 7021 ● SG
  orange, RAL 2004 ● OR
  grey, RAL 7035 ● GR
- *Plastic characteristics → Page 331*
- RoHS compliant

On request

- Plastic (SV)
  Technopolymer, self-extinguishing

Information

For GN 731.1 gripping trays are no mounting screws required.

The load capacity was tested with wall thickness s = 1,5 mm.

see also...

- *Folding handles with recessed tray GN 425.8 → Page 88*

How to order		
GN 731.1-92-SG (1 2)	1	b_1
	2	Colour

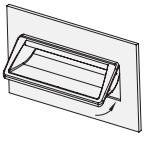

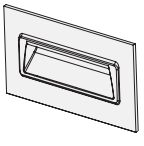

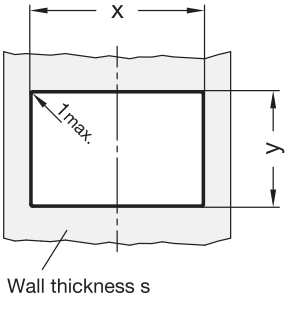

Mounting information

1) Drill the handle housing according to the template dimensions reported in the table.
2) Remove all drilling burrs before fitting the handle.
3) Fit the upper part of the handle into the housing.
4) Press onto the lower part until the handle is completely inserted.

s Wall thickness	**x** +0,2 for b_1 = 92	**y** ±0,1	**x** +0,2 for b_1 = 137	**y** ±0,1
0,7 ... 0,8	87,5	30,5	132	30,5
> 0,8 ... 1,2	87,5	30,7	132	30,7
> 1,2 ... 1,5	87,5	31,7	132	31,7
> 1,5 ... 2	87,5	31,7	132	31,7
> 2 ... 2,2	87,5	31,7	132	31,7

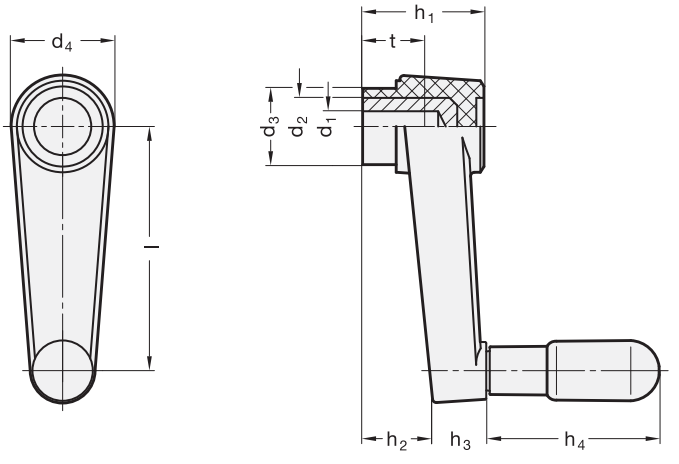

ELESA Original design MT-AT

1 Length l	2 d_1 H9 Bore	d_2	d_3	d_4	h_1	h_2	h_3	h_4 ≈	t min.	Ø Handle
50	B 6	15	18	23	30	20,5	9	35	16	14
64	B 8	15	20	27	32	18,5	13,5	45	18	16
80	B 10	18	23,5	30	36	23,5	14	60	23	18
100	B 12	18	24	34	40	24,5	14,5	65	22	22
130	B 14	26	34	40	49	34	15,5	65	28	22
160	B 16	26	34	45	55	38	17,5	80	28	24

Specification

- Body
  Plastic
  Technopolymer (Polyamide PA)
  - glass fibre reinforced
  - temperature resistant up to 90 °C
  - black, matt
- Hub bushing
  Steel, blackened
- Revolving handles
  Plastic, Technopolymer
  black, matt
- *Cross holes GN 110 → Page 317*
- *ISO-Fundamental Tolerances → Page 323*
- *Plastic characteristics → Page 331*
- *Strength properties → Page 329*
- RoHS-compliant

Information

Cranked handles GN 570.2 are connected to a shaft by means of a cross pin.

How to order		
GN 570.2-80-B10	1	**Length l**
	2	**d_1**

GN 472.3 Cranked handles with retractable handle

Aluminium

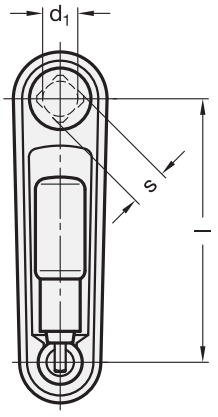

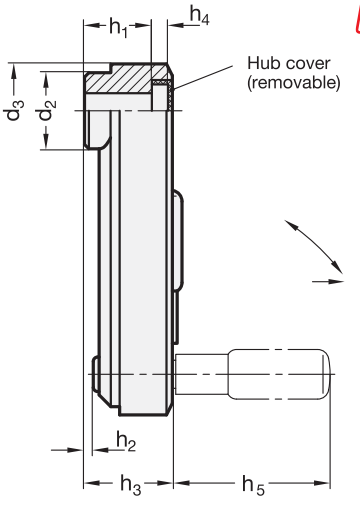

Range extended!

1 Length l	2 d_1 H7 Bore	2 s H11 Square	d_2	d_3	h_1	h_2 ≈	h_3	h_4	h_5 ≈	Ø Retractable handle GN 798.3
80	B 10	V 10	23	29	20	3	26	4,3	43	16
100	B 12	V 12	26	34	24	4,5	30	4,2	57,5	18
125	B 14	V 14	28	36	31	9	37	4,2	76,5	24

Specification

3

- Body
  Aluminium
  - plastic coated
    black, RAL 9005, textured finish ● SW
    silver, RAL 9006, textured finish ○ SR
  - hub machined
- Hub cover
  light grey
- Retractable handles GN 798.3
  - Plastic, Technopolymer
    black, matt finish
  - Retractable mechanism
    Steel, blackened
- *Square DIN 79 → Page 316*
- *Cross hole GN 110 → Page 317*
- *ISO-Fundamental Tolerances → Page 323*
- RoHS-compliant

On request

- with retractable handle GN 798.5
  (retractable mechanism Stainless Steel)
  → *Main Catalogue Page 23*

Information

The handpiece of the cranked handle GN 472.3 is locked in a tapered bore in the operating position.

For tilting, the handle must first be pulled out of the taper in axial direction.

A compression spring holds the handle in both end positions. When folded out, it automatically re-engages.

How to order

1 2 3

GN 472.3-100-V12-SR

1	Length l
2	s (d_1)
3	Colour

GN 736 Control handwheels

Aluminium black, anodized

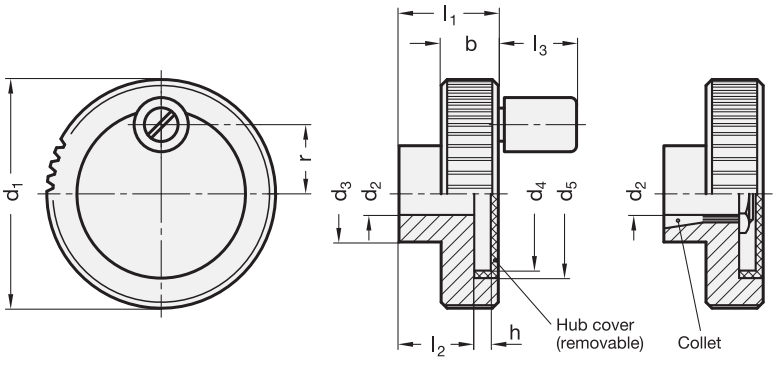

2 Bore code

B without keyway
K with keyway
Z with collet

4 Type

A without handle
D with revolving handle

1 d_1	3 d_2 H8 Bore	d_3	d_4	d_5	b −0,5	h	l_1	l_2	l_3 ≈	r	Ø Handle
52	10	22	37	39,5	13	3,8	23	17	19	15,5	13
62	10	25	47	49,5	13	3,8	23	17	21	20,5	14

Specification

- Aluminium
  anodized, black
- Hub cover
  Plastic, light grey
- Collet / Hexagon nut
  Brass
- Revolving cylindrical handles GN 599.5
  Plastic, Technopolymer
  black, matt
- *Keyway P9 DIN 6885 → Page 314*
- *Cross holes GN 110 → Page 317*
- *ISO-Fundamental Tolerances → Page 323*
- RoHS compliant

Information

Control handwheels GN 736 are used for setting operations with low torque.

Coarse setting is made by means of the cylindrical handle (fingertip grip) followed by fine setting using the knurled rim of the handwheel.

see also...

- *Control handwheels GN 735 (Plastic) → Main Catalogue Page 176*
- *Countersunk washers GN 184 (for axial fixing)*
  → Main Catalogue Page 542
- *Clamping elements GN 826 (for adjustable spindles) → Page 170*

How to order

1 2 3 4

GN 736-52-B10-D

1	d_1
2	Bore code
3	d_2
4	Type

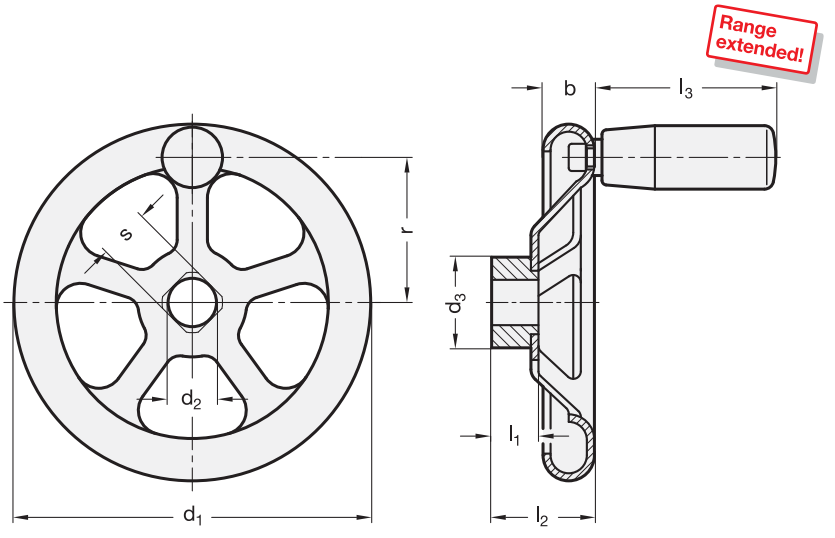

2 Bore code

B without keyway
K with keyway
V with square

4 Type

A without handle
D with revolving handle (only available for GN 227.2)

1 d_1	3 d_2 H9 Bore	3 s H11 Square	b	d_3	l_1	l_2 ≈	Ø Handle	No. of spokes	Thickness of pressed stainless steel
160	12	V 12	22	30	20	39	26	4	2
200	14	V 14	22	40	24	44	26	4	2,5
250	17	V 17	30	45	28	52	28	5	3
315	19	V 19	36	55	33	64	28	5	3
400	24	V 24	43	65	38	81	28	5	3

Specification

- **GN 227.2**
  Stainless Steel A2
  - AISI 304
  - matt shot-blasted
  - Wheel body, pressed Stainless Steel
  - Hub welded

  Revolving handle similar to GN 598.1
  - Plastic, Duroplast black, shiny
  - Spindle Stainless Steel AISI 303
- **GN 227.4**
  Stainless Steel A4
  - AISI 316L
  - matt shot-blasted
  - Wheel body, pressed Stainless Steel
  - Hub welded
- *Keyway P9 DIN 6885 → Page 314*
- *Square DIN 79 → Page 316*
- *Cross holes GN 110 → Page 317*
- *ISO-Fundamental Tolerances → Page 323*
- *Stainless Steel characteristics → Page 334*
- RoHS compliant

Information

The hub lengths of the pressed Stainless Steel-Handwheels GN 227.2 / GN 227.4 conform to DIN 950.

Stainless Steel-Handwheels GN 227.2 / GN 227.4 are renowned for their high mechanical strength. They are not affected by shock and knocks.

Stainless Steel-Handwheels GN 227.4 (A4 quality) are only available in type A (without handle).

see also...

- *Stainless Steel-Handwheels GN 950.6 → Main Catalogue Page 185*
- *Stainless Steel-Handwheels GN 949 → Main Catalogue Page 188*
- *St. Steel-Countersunk washers GN 184.5 (for axial fixing) → Main Catalogue Page 542*

Stainless Steel-Handwheel (A2)		
1 2 3 4 GN 227.2-200-B14-D	1	d_1
	2	Bore code
	3	d_2 (s)
	4	Type

Stainless Steel-Handwheel (A4)		
1 2 3 4 GN 227.4-160-V12-A	1	d_1
	2	Bore code
	3	s (d_2)
	4	Type

Adjustable St. Steel-Hand levers

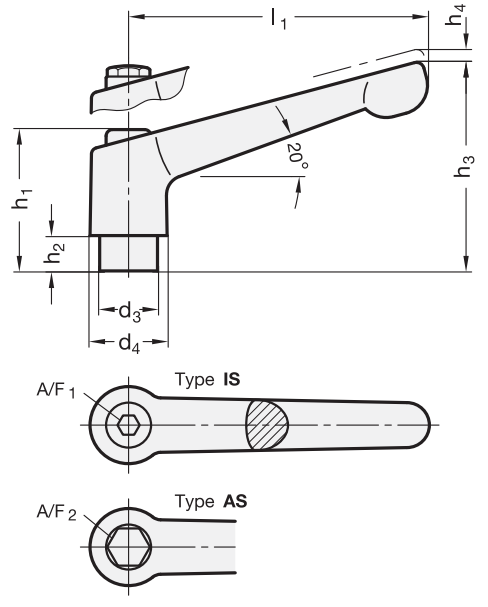

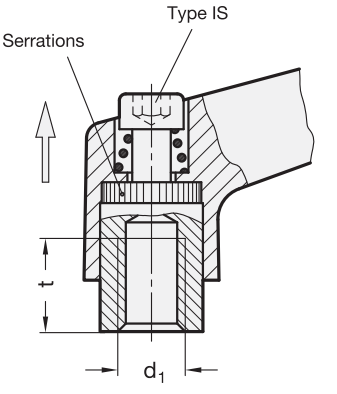

Range extended!

Rost frei Inox Stainless Steel

Inch sizes available

3 Type

AS with external hexagon
IS with internal hexagon

1 l_1	2 d_1			d_3	d_4	h_1	h_2	h_3	h_4 Stroke	A/F_1	A/F_2	t min.
30	M 3	-	-	10	13	24,5	4	31	3,5	3	7	7
30	M 4	M 5	M 6	10	13	24,5	4	31	3,5	3	7	8
45	M 4	M 5	M 6	10	13	24,5	4	34	3,5	3	7	8
63	M 6	M 8	-	13,5	17,5	31	6,5	45	4	4	10	11
78	M 8	M 10	-	16	21	36	8	54	4	4	11	14
92	M 10	M 12	-	19	24	43	11	64	4	5	13	17

Specification

- **GN 300.5**
  Handle
  Precision casting
  - Stainless Steel AISI CF-8
  - matt shot-blasted
- **GN 300.6**
  Handle
  Stainless Steel
  Precision casting
  - Stainless Steel AISI CF-8
  - electropolished
- Threaded bushing
  Stainless Steel AISI 303
- Retaining screw
  Stainless Steel AISI 303
- Spring
  Stainless Steel AISI 301
- *Stainless Steel characteristics* → *Page 334*
- RoHS compliant

Information

Adjustable hand levers GN 300.5 with full Stainless Steel-Handle, correspond to applications where „agressive“ surrounding conditions are given, or where stainless steel materials are prescribed such as in food processing or chemical industry.

Retaining screws with hexagon head (Type AS) comply with the requirement „prevents water from accumulating“.

Adjustable hand levers have proved to be ideal whenever parts have to be clamped in a confined space or in a particular lever position. The centre insert is connected to the lever via serrations which can easily be disengaged.

Pulling the lever, disengages the serrations and allowing it to be swivelled to the ideal clamping position. On releasing the lever the serrations automatically re-engage.

St. Steel-Hand lever, matt shot-blasted		
1 2 3	1	l_1
GN 300.5-78-M10-AS	2	d_1
	3	Type

St. Steel-Hand lever, electropolished		
1 2 3	1	l_1
GN 300.6-92-M12- IS	2	d_1
	3	Type

Adjustable St. Steel-Hand levers

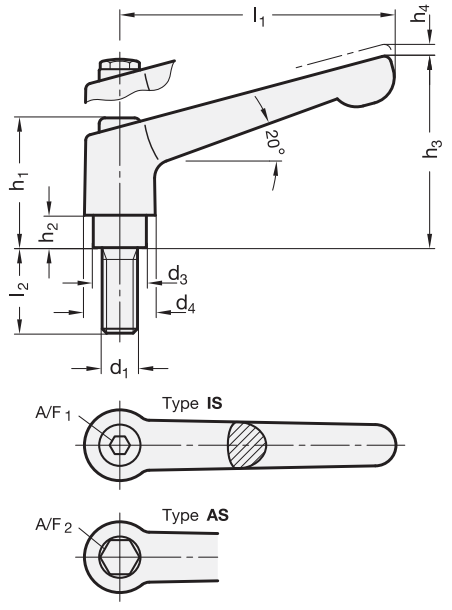

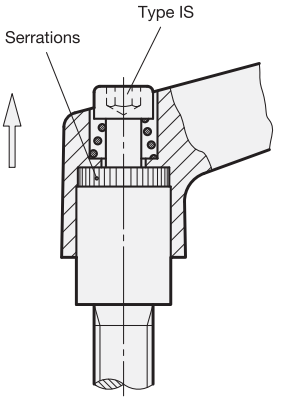

Range extended!

Rostfrei Inox Stainless Steel

Inch sizes available

3 Type

AS with external hexagon
IS with internal hexagon

1 l_1	2 d_1		3 l_2							d_3	d_4	h_1	h_2	h_3	h_4 Stroke	A/F_1	A/F_2
30	M 3	-	6	8	10	12	16	-	-	10	13	24,5	4	31	3,5	3	7
30	M 4	-	12	16	20	25	32	-	-	10	13	24,5	4	31	3,5	3	7
30	M 5	M 6	12	16	20	25	32	40	50	10	13	24,5	4	31	3,5	3	7
45	M 4	-	12	16	20	25	32	-	-	10	13	24,5	4	34	3,5	3	7
45	M 5	M 6	12	16	20	25	32	40	50	10	13	24,5	4	34	3,5	3	7
63	M 6	M 8	16	20	25	32	40	50	63	13,5	17,5	31	6,5	45	4	4	10
78	M 8	M 10	20	25	32	40	50	63	80	16	21	36	8	54	4	4	11
92	M 10	M 12	20	25	32	40	50	63	80	19	24	43	11	64	4	5	13

Specification

- **GN 300.5**
  Handle
  Precision casting
  - Stainless Steel AISI CF-8
  - matt shot-blasted
- **GN 300.6**
  Handle
  Stainless Steel
  Precision casting
  - Stainless Steel AISI CF-8
  - electropolished
- Threaded stud, Stainless Steel AISI 303
- Retaining screw, Stainless Steel AISI 303
- Spring, Stainless Steel AISI 301
- *Stainless Steel characteristics → Page 334*
- RoHS compliant

Information

Adjustable hand levers GN 300.5 with full Stainless Steel-Handle, correspond to applications where „agressive“ surrounding conditions are given, or where stainless steel materials are prescribed such as in food processing or chemical industry.

Retaining screws with hexagon head (Type AS) comply with the requirement „prevents water from accumulating“.

Adjustable hand levers have proved to be ideal whenever parts have to be clamped in a confined space or in a particular lever position. The centre insert is connected to the lever via serrations which can easily be disengaged.

St. Steel-Hand lever, matt shot-blasted

1 2 3 4

GN 300.5-63-M8-32-IS

1	l_1
2	d_1
3	l_2
4	Type

St. Steel-Hand lever, electropolished

1 2 3 4

GN 300.6-92-M12-50-AS

1	l_1
2	d_1
3	l_2
4	Type

GN 603 Adjustable hand levers

Handle Plastic / with releasing button

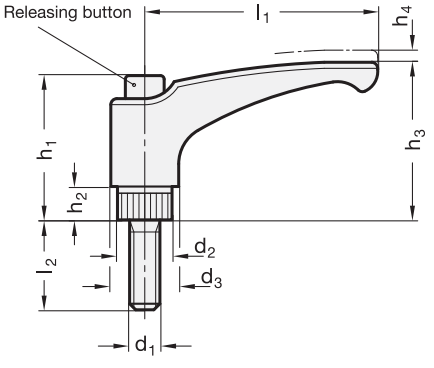

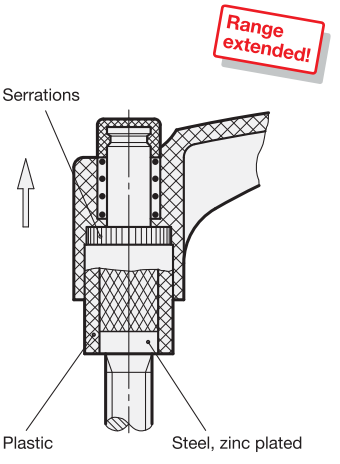

ELESA Original design: ERX.p

1 l_1	2 d_1			3 l_2										d_2	d_3	h_1	h_2	h_3	h_4 Stroke
30	M 5	-	-	10	16	20	-	-	-	-	-	-	-	12	15,5	29,5	6	30	3,5
30	M 6	-	-	10	16	20	25	30	40	-	-	-	-	12	15,5	29,5	6	30	3,5
44	M 5	-	-	10	16	20	-	-	-	-	-	-	-	12	15,5	29,5	6	32,5	3,5
44	M 6	-	-	10	16	20	25	30	40	45	-	-	-	12	15,5	29,5	6	32,5	3,5
63	M 6	-	-	10	16	20	25	30	35	40	-	-	-	15	19	37,5	8	43	4
63	M 8	-	-	16	20	25	30	35	40	45	50	60	70	15	19	37,5	8	43	4
78	M 10	-	-	20	25	30	35	40	50	60	70	-	-	19	23	47	12	54	4
78	M 12	-	-	20	25	30	35	40	45	50	60	70	80	19	23	47	12	54	4
95	M 12	M 16	-	30	50	70	-	-	-	-	-	-	-	21,5	26,5	54,5	13	64,5	4,5
108	M 12	M 14	M 16	30	50	70	-	-	-	-	-	-	-	25	30	54,5	11	65,5	4,5

* not availble from stock, requires a minimum order quantity

Specification

4

- Handle
  Plastic
  Technopolymer (Polyamide PA)
  - glass fibre reinforced
  - temperature resistant up to 130 °C
  - black-grey, similar RAL 7021
- Colour of the releasing button:
  black-grey, RAL 7021 DSG
  orange, RAL 2004 DOR
  grey*, RAL 7035 DGR
  yellow*, RAL 1021 DGB
  blue*, RAL 5024 DBL
  red*, RAL 3000 DRT
- Threaded stud
  Steel zinc plated, blue passivated
- *Plastic characteristics → Page 331*
- RoHS compliant

Information

Adjustable hand levers GN 603, like all the products of the Ergostyle® range, are renowned for their good style but also their ergonomical shape.

They are like all adjustable hand levers ideal whenever parts have to be clamped in a confined space or in a particular lever position. The centre insert is connected to the lever via serrations which can easily be disengaged.

The releasing button offers an easy disengagement. Its use is limited to applications where dismantling of the lever for installation is not required.

see also...

- *Product family Ergostyle® → Main Catalogue Page 13*

How to order

1 2 3 4

GN 603-63-M8-20-DOR

1	l_1
2	d_1
3	l_2
4	Colour releasing button

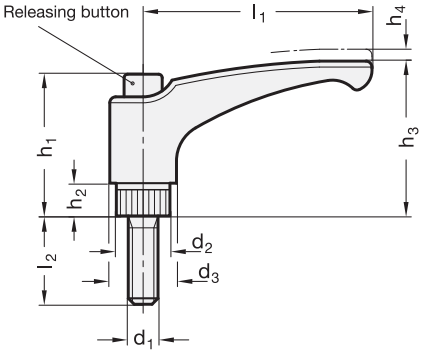

Range extended!

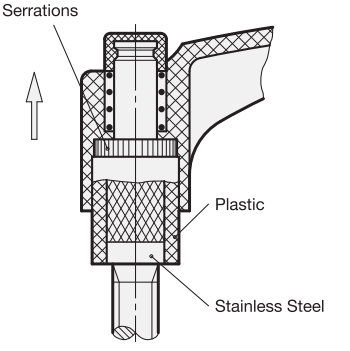

ELESA Original design ERX.SST.p

Rostfrei Inox Stainless Steel

1 l_1	2 d_1	3 l_2										d_2	d_3	h_1	h_2	h_3	h_4 Stroke
30	M 5	10	16	-	-	-	-	-	-	-	-	12	15,5	29,5	6	30	3,5
30	M 6	10	16	20	25	30	-	-	-	-	-	12	15,5	29,5	6	30	3,5
44	M 5	10	16	-	-	-	-	-	-	-	-	12	15,5	29,5	6	32,5	3,5
44	M 6	10	16	20	25	30	-	-	-	-	-	12	15,5	29,5	6	32,5	3,5
63	M 6	10	20	30	40	-	-	-	-	-	-	15	19	37,5	8	43	4
63	M 8	16	20	25	30	35	40	45	50	60	70	15	19	37,5	8	43	4
78	M 10	20	30	35	40	50	60	-	-	-	-	19	23	47	12	54	4
78	M 12	30	35	40	50	70	-	-	-	-	-	19	23	47	12	54	4
95	M 12	30	40	50	70	-	-	-	-	-	-	21,5	26,5	54,5	13	64,5	4,5
108	M 12	30	40	50	70	-	-	-	-	-	-	25	30	54,5	11	65,5	4,5

* not availble from stock, requires a minimum order quantity

Specification

4

- Handle
  Plastic
  Technopolymer (Polyamide PA)
  - glass fibre reinforced
  - temperature resistant up to 130 °C
  - black-grey, matt similar RAL 7021
- Colour of the releasing button (shiny finish):
  black-grey, RAL 7021 ● DSG
  orange, RAL 2004 ● DOR
  grey*, RAL 7035 ● DGR
  yellow*, RAL 1021 ● DGB
  blue*, RAL 5024 ● DBL
  red*, RAL 3000 ● DRT
- Threaded stud
  Stainless Steel AISI 303
- *Plastic characteristics → Page 331*
- *Stainless Steel characteristics → Page 334*
- RoHS compliant

Information

Adjustable hand levers GN 603.1, like all the products of the Ergostyle® range, are renowned for their good style but also their ergonomical shape.

They are like all adjustable hand levers ideal whenever parts have to be clamped in a confined space or in a particular lever position. The centre insert is connected to the lever via serrations which can easily be disengaged.

The releasing button offers an easy disengagement. Its use is limited to applications where dismantling of the lever for installation is not required.

see also...

- *Product family Ergostyle® → Main Catalogue Page 13*

How to order

1 2 3 4

GN 603.1-63-M8-20-DOR

1	l_1
2	d_1
3	l_2
4	Colour of the releasing button

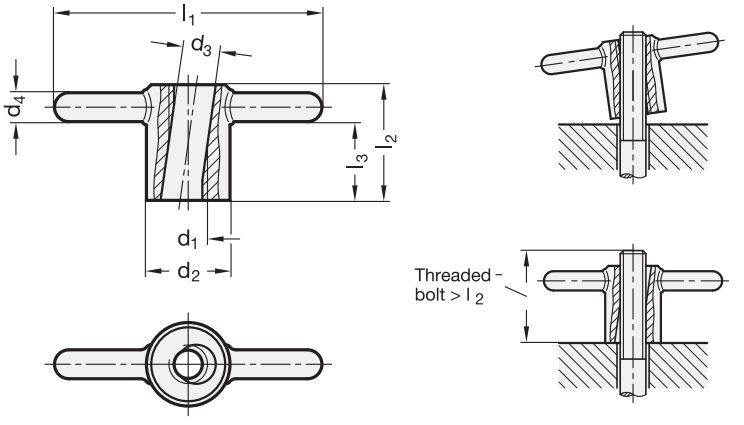

[1]

d_1	d_2	d_3	d_4	l_1 ≈	l_2	l_3 ≈
M 10	24	10,5	8	68	30	20
M 12	26	13	9	82	36	24,5
M 16	32	17	10	98	45	32

Specification

- Steel
  zinc plated, blue passivated
- Butt-welded toggle
- RoHS compliant

On request

- in Stainless Steel

Information

Quick release toggle nuts GN 6336.3 are used in such applications where the knob has to be completely removed after the releasing operation and refitted rapidly for re-clamping.

Plug the toggle nut onto the threaded bolt at an oblique angle. During the clamping action, it engages into the threads of the bolt.

see also...
- *Quick release knurled nuts GN 6303.1 → Main Catalogue Page 324*
- *Quick release star knobs GN 6336.3 → Main Catalogue Page 281*

How to order		
GN 6305.1-M16-ST [1] [2]	1	d_1
	2	Material

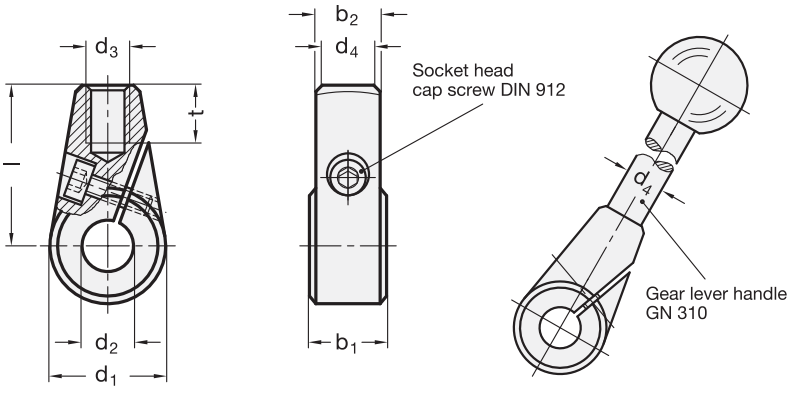

Rost frei Inox Stainless Steel

1 d_1	2 d_2 Bore		b_1 ±0,2	b_2	d_3	d_4 Gear lever handle	Length **l**	**t** min.
24	B 10	B 12	15,5	13	M 8	10	36	11
28	B 12	B 14	17,5	15	M 10	12	41	14
32	B 14	B 16	19,5	17	M 12	14	45	16

Specification

- **GN 150**
  - Sintered Steel
    black oxidised with vapor
  - Cylinder head screw DIN 912
    Steel, black
- **GN 150.5**
  - Stainless Steel (Sintered Steel)
    AISI 316L
  - Cylinder head screw DIN 912
    Stainless Steel AISI 304
- *Stainless Steel characteristics → Page 334*
- RoHS compliant

Information

Split hubs GN 150 / GN 150.5 are distinguished by the method of simple clamping to any shaft.

This can be achieved without prior machining of the shaft, eliminating clamping parts and assembly work.

A further advantage is the positioning of the lever arm to any required position.

The shaft tolerance should be within h11; to transmit higher torques the hub can be supplied with a keyway.

see also...

- *Gear lever handles GN 310 → Main Catalogue Page 42*
- *Stainless Steel-Gear lever handles GN 310 → Main Catalogue Page 43*

Split hub 1 2 GN 150-28-B14	1	d_1
	2	d_2

Stainless Steel-Split hub 1 2 GN 150.5-32-B14	1	d_1
	2	d_2

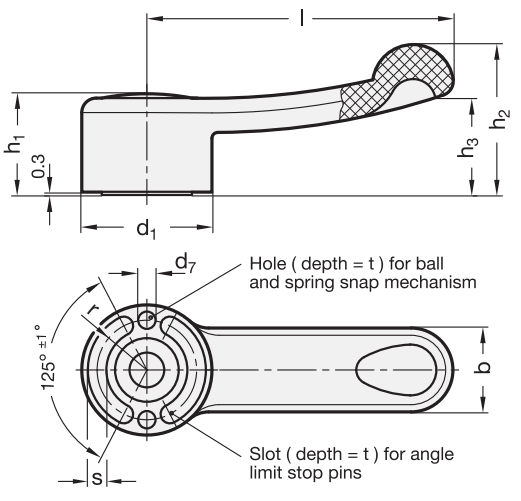

ELESA original design ELC./ELC.SST

Rost frei Inox Stainless Steel

1 d_1	2 d_2 H7 Bore	d_3	d_4	d_5	d_6	d_7	b	h_1	h_2	h_3	h_4	h_5	h_6	k	l	r	s	t
32	B 6	15	22,5	16	10	4	20	24	35	24	18	2	3	24	67	12	4,3	9
37	B 8	18	26	20	13,5	5	23	27	42	28	20	2,5	5	26	85	13,8	4,3	12,5
46	B 12	22	31,5	25,5	17	6	29	35	54	36	24	2	8	32	110	17,5	6,5	15,5
54	B 14	26	36	31	21	8	34	38	60	38	29,5	2,5	6	39	140	20,2	7,3	16

Specification

3

- Plastic
  - glass fibre reinforced
  - temperature resistant up to 130 °C
  - black-grey, matt, similar to RAL 7021
- **GN 623**
  Bushing
  Steel, blackened
- **GN 623.5**
  Bushing
  Stainless Steel AISI 303
- Colour of the cap (matt):

black-grey, RAL 7021	**DSG**
orange, RAL 2004	**DOR**
grey, RAL 7035	**DGR**
yellow, RAL 1021	**DGB**
blue, RAL 5024	**DBL**
red, RAL 3000	**DRT**
grey, RAL 7035 with arrow	**PGR**

- *Keyway P9 DIN 6885, Page 2 → Page 315*
- *Stainless Steel characteristics → Page 334*

Information

Design and handling of the gear levers GN 623 / GN 623.5 comply with the requirements and claims of the Ergostyle® product family.

The cap covers attachment elements (see assembly example) as well as protruding or recessed shafts.

Gear levers GN 623 / GN 623.5 can be supplied as standard with:

Square DIN 79 **V** + Bore-Ø
Keyway DIN 6885 **K** + Bore-Ø

see also...

- *Product family Ergostyle® → Main Catalogue Page 12*

Control lever, bushing Steel		
1 2 3	1	d_1
GN 623-37-B8-DGB	2	d_2
	3	Colour of the cap

Control lever, bushing Stainless Steel		
1 2 3	1	d_1
GN 623.5-46-B12-DSG	2	d_2
	3	Colour of the cap

Assembly examples

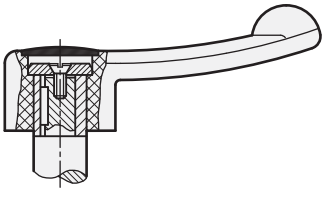

Gear levers GN 623 / GN 623.5 attached with keyway / adjusting spring, using countersunk washer GN 184 (Main Catalogue Page 542).

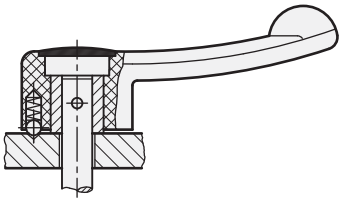

Gear lever GN 512 with ball and spring snap mechanism for indexing the gearing angle, attached with cross pin.The cross pin is to be attached at an angle of 45° to the shaft axis. These parts are not included in the delivery and must be ordered separately. More information on request.

Stainless Steel-Star knobs

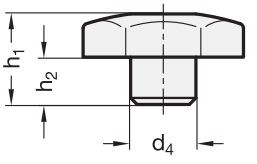

Type **E**

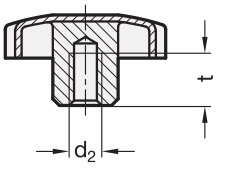

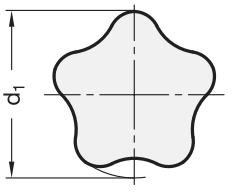

Type **C**

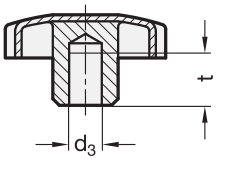

Inox Stainless Steel

Inch sizes available

3 Type

E with threaded blind bore
C with blind bore H7

1 d_1	2 d_2 Thread	2 d_3 H7 Bore	d_4	$h_1 \approx$	$h_2 \approx$	t min.
40	M 8	B 8	14	24	12	15
50	M 10	B 10	18	30	16,5	18
60	M 12	B 12	20	37,5	20	22

Specification

- **GN 5334**
  Stainless Steel AISI 304 (A2)
- **GN 5334.4**
  Stainless Steel AISI 316L (A4)

This information applies to both standards:

- Knob drawn from Stainless Steel-sheet
- Hub welded
- matt shot-blasted
- *Cross hole GN 110 → Page 317*
- *ISO-Fundamental tolerances → Page 323*
- *Stainless Steel characteristics → Page 334*
- RoHS compliant

Information

Original ELESA design, now produced in metal in agreement with ELESA s.p.a.

see also...

- *Stainless Steel-Triangular knobs GN 5339.5 → Main Catalogue Page 299*
- *Stainless Steel-Star knobs GN 5335 → Page 70/71*
- *Stainless Steel-Wing nuts GN 834 → Page 306*
- *Stainless Steel-Knurled nuts GN 536 → Main Catalogue Page 321*

Stainless Steel-Star knob, AISI 304 (A2)		
GN 5334-50-M10-E (1 2 3)	1	d_1
	2	d_2 (d_3)
	3	Type

Stainless Steel-Star knob, AISI 316L (A4)		
GN 5334.4-40-B8-C (1 2 3)	1	d_1
	2	d_3 (d_2)
	3	Type

Star knobs with threaded bolt

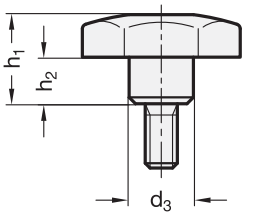

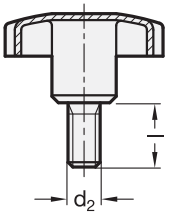

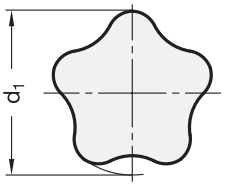

Inox Stainless Steel

Inch sizes available

1 d_1	2 d_2	3 Length l				d_3	$h_1 \approx$	$h_2 \approx$
40	M 8	20	30	40	-	14	24	12
50	M 10	20	30	40	-	18	30	16,5
60	M 12	20	30	40	50	20	37,5	20

Specification

- **GN 5334**
  Stainless Steel AISI 304 (A2)
- **GN 5334.4**
  Stainless Steel AISI 316L (A4)

This information applies to both standards:

- Knob drawn from Stainless Steel-sheet
- Hub with threaded bolt welded
- matt shot-blasted
- *Stainless Steel characteristics → Page 334*
- RoHS compliant

Information

Original ELESA design, now produced in metal in agreement with ELESA s.p.a.

see also...

- *Stainless Steel-Wing screws GN 835 → Main Catalogue Page 307*
- *Stainless Steel-Knurled screws GN 535 → Main Catalogue Page 321*

St. Steel-Star knobs with threaded bolt, AISI 303		
GN 5334-50-M10-40 (1 2 3)	1	d_1
	2	d_2
	3	Length l

St. Steel-Star knobs with threaded bolt, AISI 316L		
GN 5334.4-60-M12-30 (1 2 3)	1	d_1
	2	d_2
	3	Length l

Type **A**

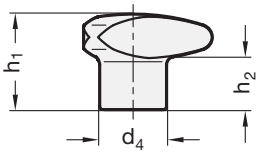

Type **E**

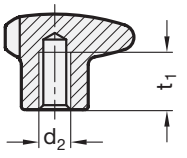

Type **D**

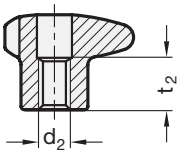

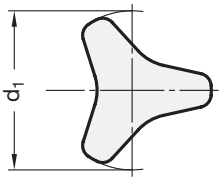

Type **C**

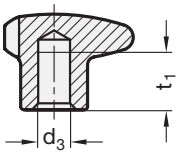

Inox Stainless Steel

3 Type

- **A** without bore
- **E** with threaded blind bore
- **D** with threaded through bore
- **C** with plain blind bore H7

1 d_1	2 d_2 Thread Type E / D	2 d_3 H7 Bore Type C	d_4	h_1	h_2	t_1 min.	t_2
40	M 6	-	18	26	15	12	13
40	M 8	B 8	18	26	15	15	13
50	M 8	-	21	30	17	15	16
50	M 10	B 10	21	30	17	18	16
60	M 10	-	25	35	18	18	20
60	M 12	B 12	25	35	18	22	20

Specification

- **GN 5345**
  - Stainless Steel AISI 303
  - matt blasted
- **GN 5345.4**
  - Stainless Steel AISI 316L (A4)
  - matt blasted
- *Cross holes GN 110* → *Page 317*
- *Stainless Steel characteristics* → *Page 334*
- *ISO-Fundamental tolerances* → *Page 323*
- RoHS compliant

On request

- highly polished (PL)

Information

Stainless Steel-Three-lobe knobs GN 5345 / GN 5345.4 have a smooth and sealed surface. They are particularly suitable for use where hygiene requirements are high. Their shape allows relatively high torques to be applied.

Stainless Steel-Three-lobe knob AISI 303		
GN 5345-60-B12-C	1	d_1
	2	d_3 (d_2)
	3	Type

Stainless Steel-Three-lobe knob AISI 316L (A4)		
GN 5345.4-40-M8-E	1	d_1
	2	d_2 (d_3)
	3	Type

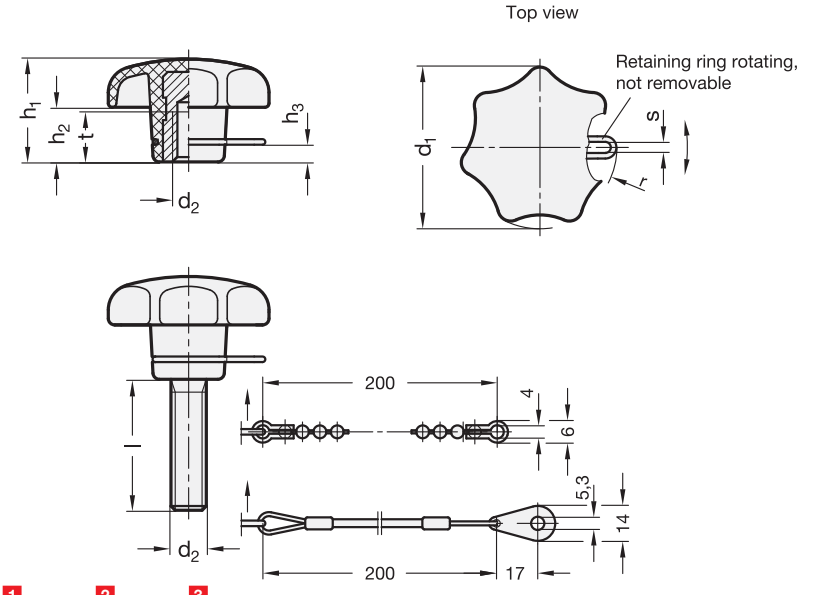

Inox Stainless Steel

4 Form

A only with retaining ring
H with retaining cable
K with ball chain

1 d_1	2 d_2	3 Length l				h_1	h_2	h_3	r	s	t
25*	M 5	10	15	20	25	16	8	2,5	19	2,8	-
32	M 6	16	20	25	30	20	10	3,5	20	3	12
40	M 8	20	25	30	40	25	13	4	22	3,2	14
50	M 10	20	25	30	45	32	17	5	24	3,4	18
63	M 12	30	40	50	-	40	21	5,5	25	3,6	22

* This size is only available with treaded stud.

Specification

- Sterngriff DIN 6336
  Plastic
  Thermoplast (Polyamide PA)
  black, matt
- Bushing
  Stainless Steel AISI 303
- Threaded stud
  Stainless Steel
  - M5 ... M10: 304 Cu
  - M12: AISI 303
- Retaining ring GN 111.6
  Stainless Steel AISI 301
- Ball chain GN 111.5 (Type K)
  Stainless Steel AISI 301
- Retaining cable GN 111.2 (Type H)
  Stainless Steel
  coated with clear plastic
- RoHS compliant

On request

- Ball chains / Retaining cables with other lengths
- with spiral retaining cable GN 111.4
- other GN standards with loss protection

Information

Star knobs GN 6336.13 can be captive-attached to a base element with the help of a ball chain or a retaining cable.

The star knobs are supplied ready assembled (with retaining ring and ball chain or retaining cable).

see also...
- *Stainless Steel-Ball chains GN 111.5 → Main Catalogue Page 477*
- *Retaining cables GN 111.2 → Main Catalogue Page 478*
- *Spiral retaining cables GN 111.4 → Main Catalogue Page 479*
- *Retaining rings GN 111.6 → Page 134*

Star knob
1 2 4
GN 6336.13-40-M8-A

1	d_1
2	d_2
3	Type

Star knob with threaded stud
1 2 3 4
GN 6336.13-50-M10-30-K

1	d_1
2	d_2
3	Length l
4	Type

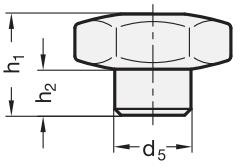

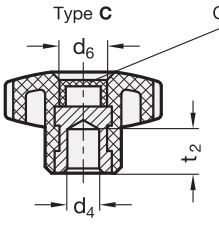

Range extended!

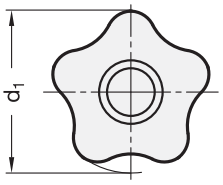

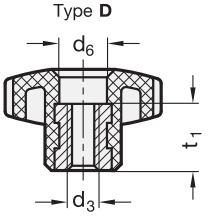

ELESA Original design VCT.

3 Type

E with cap (threaded blind bore)
C with cap (blind bore H9)
D without cap (threaded through bore)

1 d_1	2 d_2 Type E			SV* Type E	2 d_3 Type D			2 d_4 H9 Type C		d_5	d_6	h_1	h_2	t_1	t_2 min.
25	M 4	M 5	M 6	M 5	-	-	-	-	-	13	8	19	8	10	-
32	M 5	M 6	-	M 6	M 5	M 6	M 8	-	-	15	10	23	10	12	-
40	M 6	M 8	-	M 8	M 6	M 8	-	B 8	-	17	13	27	12	18	14
40	M 10	-	-	-	M 10	-	-	-	-	17	13	27	12	17	-
50	M 8	M 10	M 12	M 10	M 8	M 10	M 12	B 8	B 10	19	15	32	14	20	14
63	M 10	M 12	-	-	M 10	M 12	-	B 8	B 10	22	19	37	16	26	20
74	M 12	M 14	-	-	M 12	M 14	-	B 8	-	26	17	43,5	22	26	20
74	M 16	-	-	-	M 16	-	-	-	-	26	17	43,5	22	31	-

* not availble from stock, requires a minimum order quantity

Specification

4

- Plastic
  Technopolymer (Polypropylene PP)
  - reinforced, shock-resistant
  - temperature resistant up to 90 °C
  - black, matt finish
- Type E and D
  Bushing Brass
- Type C
  Bushing Steel
- Plastic (only Type E) **SV***
  Technopolymer (Polyamide PA)
  - glass fibre reinforced
  - self extinguishing
  - temperature resistant up to 150 °C
  - black, matt finish
- *Plastic characteristics* → *Page 331*
- RoHS compliant

On request

- caps in other colours
  (standard colour: black)

Information

Star knobs GN 5337.2 Type SV are produced from a plastic material, which according to UL 94 V-O is classified as a self extinguishing material. This classification to UL 94 V-O (Underwriters Laboratories) determines the resistance of a plastic material to fire. This comprises a test on a piece of plastic material of a specific form and dimensions in a vertical position to be set alight, whereby the flame according to V-O must extinguish itself without burning droplets developing.

Star knob
1 2 3
GN 5337.2-40-M8-E

1	d_1
2	d_2 (d_3, d_4)
3	Type

Star knob self extinguishing
1 2 3 4
GN 5337.2-32-M5-D-SV

1	d_1
2	d_3 (d_2)
3	Type
4	Material

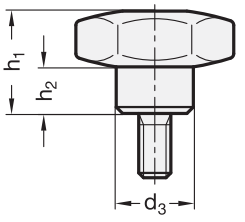

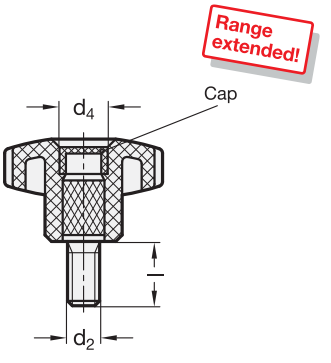

ELESA Original design VCT.p

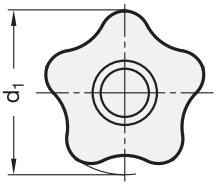

1 d_1	2 d_2	3 Length l				d_3	d_4	h_1	h_2 ≈
25	M 5	10	16	20	-	13	8	19	8
25	M 6	10	16	20	30	13	8	19	8
32	M 6	16	20	30	-	15	10	23	10
32	M 8	16	20	30	40	15	10	23	10
40	M 6	20	25	30	-	17	13	27	12
40	M 8	16	25	35	45	17	13	27	12
50	M 8	20	30	40	50	19	15	32	14
50	M 10	20	30	40	50	19	15	32	14
63	M 10	20	30	40	50	22	19	37	16
63	M 12	30	50	-	-	22	19	37	16
74	M 12	30	50	70	-	26	17	43,5	22
74	M 14	50	-	-	-	26	17	43,5	22

Specification

- Plastic
  Technopolymer (Polypropylene PP)
  - reinforced, shock-resistant
  - temperature resistant up to 90 °C
  - black, matt finish
- Threaded bolt
  Steel
  zinc plated, blue passivated
- *Plastic characteristics → Page 331*
- RoHS compliant

On request

- caps in other colours
  (standard colour: black)

Information

see also...

- *Softline-Star knobs GN 5337.6 → Page 68*
- *Safety star knobs GN 5337.9 → Page 69*

How to order

1 2 3

GN 5337.2-50-M10-20

1	d_1
2	d_2
3	Length l

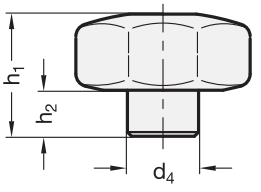

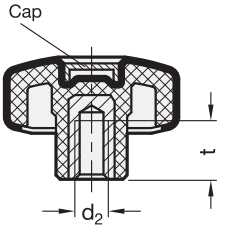

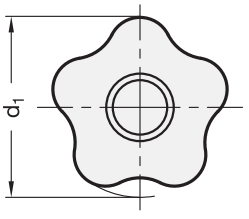

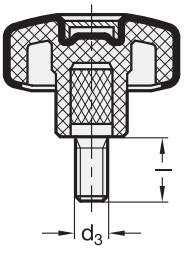

ELESA Original design VCT.-SOFT

SOFT

1 d1	2 d2	2 d3	3 Length l			d4	h1	h2	t min.
43	-	M 6	25	30	-	17	29	11	-
43	M 8	M 8	16	20	25	17	29	11	13
53	M 10	M 10	20	30	-	19	34	13	17
66	M 10	M 10	20	-	-	21,5	38,5	15,5	17
77	M 12	M 12	30	-	-	26	46	21	20

Specification

- Plastic
  Technopolymer (Polypropylen PP)
  - lagged with a soft elastomer (TPE) 70 Shore A
  - temperature resistant up to 80 °C
  - black, matt finish
- Softline lagging and plastic core chemically bonded
- Bushing
  Brass
- Threaded bolt
  Steel zinc plated, blue passivated
- *Plastic characteristics → Page 331*
- *Elastomer characteristics → Page 330*
- RoHS compliant

On request

- Caps in other colours
  (Standard colour: black)

Information

The Softline lagging of the star knob GN 5337.6 makes this star knob particularly „operator friendly“ and hence ergonomic.

The soft and slip free surface makes it very contact friendly either for moist hands (perspiration), oily surface or even high or low temperature.

The use of Softline Star knobs is recommended particularly when heavy duty clamping is required.

see also...

- *Product family Softline® → Main Catalogue Page 12*

Softline-Star knobs		
GN 5337.6-43-M8 (1 2)	1	d1
	2	d2

Softline-Star knobs with threaded bolt		
GN 5337.6-53-M10-30 (1 2 3)	1	d1
	2	d3
	3	Length l

GN 5337.9 Safety star knobs

lockable

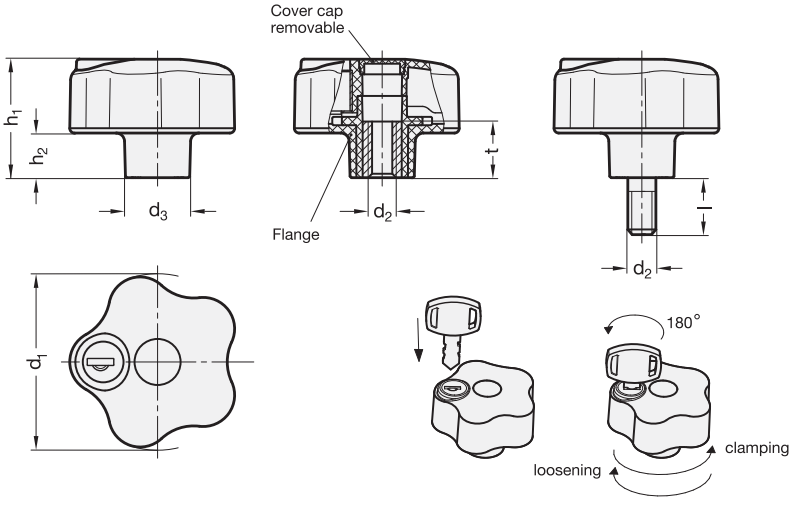

ELESA original design VLSK

4 Form

SU Lock
with different combinations

1 d_1	2 d_2	3 Length l	d_3	h_1	h_2 ≈	t
63	M 6	-	23	44	17	18
63	M 8	20	23	44	17	18
63	M 10	20	23	44	17	20

Specification

- Handle Plastic
  Technopolymer (Polyamide PA)
  - glasfibre reinforced
  - temperature resistant up to 100 °C
  - black, matt
- Flange Technopolymer
  with handle
  ultrasonically welded
- Threaded bushing
  Brass
- Threaded bolt
  Steel
  zinc plated, blue passivated
- Lock mechanism
  Zin die casting
- Key
  Brass, nickel plated
  with handle in plastic
- *Plastic characteristics → page 331*
- RoHS compliant

Information

Safety star knobs GN 5337.9 are designed to prevent unauthorised use.

To engage and release, the key must be inserted and turned by 180°, creating a formlock between the handle and the threaded bushing or screw. Turning the key back by 180° will release the connection.

The key can be inserted and pulled off in both end positions.

Two keys per star knob are included with the delivery.

see also...

- *Star knobs GN 5337.2 → Page 66 / 67*

Safety star knob with threaded bushing		
GN 5337.9-63-M6-SU	1	d_1
	2	d_2
	3	Type

Safety star knob with threaded bolt		
GN 5337.9-63-M10-20-SU	1	d_1
	2	d_2
	3	Length l
	4	Type

Stainless Steel-Star knobs

Type **A**

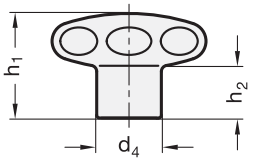

Type **E**

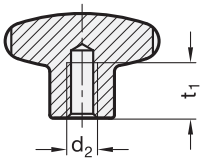

Type **D**

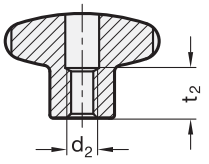

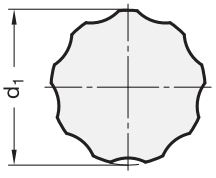

Type **C**

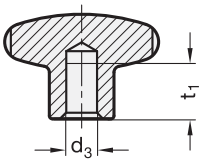

Rostfrei Inox Stainless Steel

Inch Inch sizes available

3 Type

A without bore
E with threaded blind bore
D with threaded through bore
C with plain blind bore H7

1 d_1	2 d_2 Thread Type D Type E	2 d_3 H7 Bore Type C	d_4	h_1	h_2	t_1 min.	t_2
40	M 6	-	18	30,5	15	12	13
40	M 8	B 8	18	30,5	15	15	13
50	M 8	-	21	34	17	15	16
50	M 10	B 10	21	34	17	18	16
60	M 10	-	25	39	18	18	20
60	M 12	B 12	25	39	18	22	20

Specification

4

- **GN 5335**
  Stainless Steel AISI 303
  - matt shot-blasted —
  - highly polished **PL**
    (only Type D and E)
- **GN 5335.4**
  Stainless Steel AISI 316L (A4)
  matt shot-blasted —
- *Cross hole GN 110 → Page 317*
- *ISO-Fundamental Tolerances → Page 323*
- *Stainless Steel characteristics → Page 334*
- RoHS compliant

Information

Stainless Steel-Star knobs GN 5335 / GN 5335.4 are a special development intended for the food processing machinery industry. The smooth and enclosed areas as well as the large corner radii comply with the requirements of hygiene standards.

see also...

- *Stainless Steel-Star knobs GN 5334 → Page 62/63*
- *Stainless Steel-Wing nuts GN 834 → Main Catalogue Page 306*
- *Stainless Steel-Knurled nuts GN 536 → Main Catalogue Page 321*

Star knob (Stainless Steel AISI 303)

1 2 3 4
GN 5335-50-M10-D-PL

1	d_1
2	d_2 (d_3)
3	Type
4	highly polished

Star knob (Stainless Steel AISI 316L)

1 2 3
GN 5335.4-40-M8-E

1	d_1
2	d_2 (d_3)
3	Type

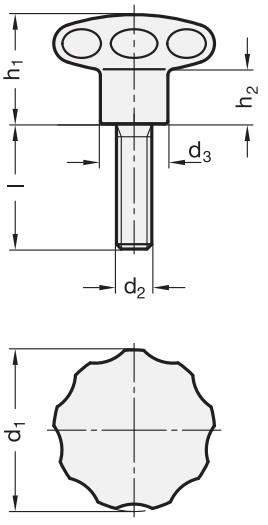

Rostfrei Inox Stainless Steel

1	2	3					
d_1	d_2	Length **l**			d_3	h_1	h_2
40	M 8	16	20	25	18	30,5	15
50	M 10	20	25	30	21	34	17
60	M 12	25	30	40	25	39	18

Specification

- Stainless Steel
  - AISI 303
  - matt blasted
- *Stainless Steel characteristics → Page 334*
- RoHS compliant

Information

Stainless Steel-Star knobs GN 5335 are a special development intended for the food processing machinery industry. The smooth and enclosed areas as well as the large corner radii comply with the requirements of hygiene standards.

see also...

- *Stainless Steel-Star knobs with threaded stud GN 5334 → Page 63*
- *Stainless Steel-Star knobs with threaded bolt GN 5334.4 →Page 63*
- *Stainless Steel-Wing screws GN 433 → Page 72*
- *Stainless Steel-Wing screws GN 835 → Main Catalogue Page 307*

How to order

1 2 3

GN 5335-40-M8-20

1	d_1
2	d_2
3	Length l

Wing nuts / Wing screws

Stainless Steel

Range extended!

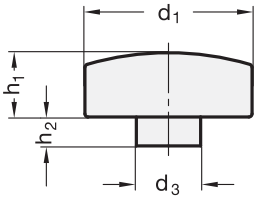

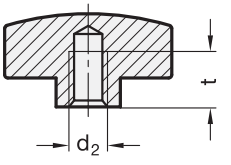

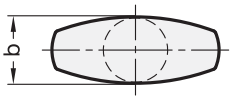

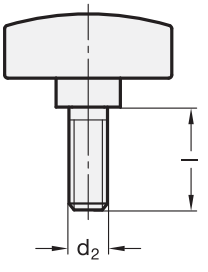

Rost frei Inox Stainless Steel

1 d_1	2 d_2	3 Length l			d_3	b	h_1	h_2	t min.
26	M 4	-	-	-	10	11	10	4,5	7
26	M 5	10	16	-	10	11	10	4,5	8
26	M 6	16	20	25	10	11	10	4,5	8
34	M 6	20	25	30	12	13	12	5	10
34	M 8	16	20	30	12	13	12	5	9

Specification

4

- Stainless Steel-Precision casting
  - AISI CF-8
  - matt shot-blasted **MT**
- *Stainless Steel characteristics → Page 334*
- RoHS compliant

Information

see also...

- *Stainless Steel-Wing nuts GN 834 (with bigger diameter d_1) → Main Catalogue Page 306*
- *Stainless Steel-Wing screws GN 835 (with bigger diameter d_1) → Main Catalogue Page 307*

Stainless Steel-Wing nut

1 2 4

GN 434-26-M6-MT

1	d_1
2	d_2
4	Finish

Stainless Steel-Wing screw

1 2 3 4

GN 433-34-M8-20-MT

1	d_1
2	d_2
3	Length l
4	Finish

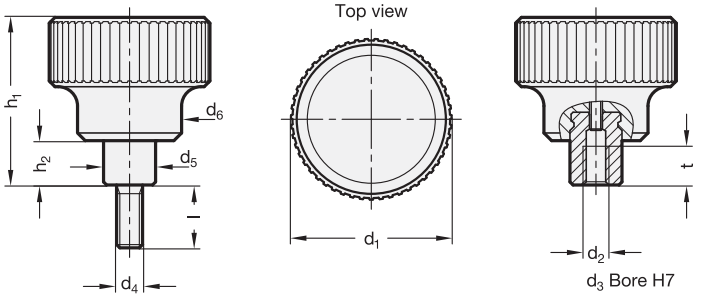

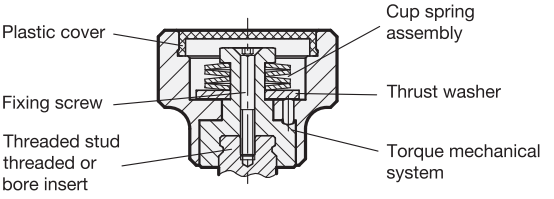

1 d_1	2 d_2 Thread			2 d_3 H7 Bore	2 d_4 Thread	3 Length l					d_5	d_6	h_1	h_2	t min.	4 Torque ±10% in Nm		
27	M 3	-	-	B 5	M 4	12	16	20	25	32	10	19	35	9,5	7	0,7	1	1,5
27	M 4	M 5	M 6	B 6	M 5	12	16	20	25	32	10	19	35	9,5	9	0,7	1	1,5
34	M 3	-	-	B 5	M 5	12	16	20	25	32	10	21	37,5	9,5	7	1	1,5	2,2
34	M 4	M 5	M 6	B 6	M 6	12	16	20	25	32	10	21	37,5	9,5	9	1	1,5	2,2
42	M 6	-	-	B 6	M 8	16	20	25	32	40	13,5	27	43,5	11,5	11	2	2,5	3,2
42	M 8	-	-	B 8	M 10	20	25	32	40	50	13,5	27	43,5	11,5	11	2	2,5	3,2
52	M 10	-	-	B 10	M 10	25	32	40	50	63	19	32	54	15,5	17	2,5	3	4
52	M 12	-	-	B 12	M 12	25	32	40	50	63	19	32	54	15,5	17	2,5	3	4
62	M 10	-	-	B 10	M 10	25	32	40	50	63	19	33	54	15,5	17	3	4	5,5
62	M 12	-	-	B 12	M 12	25	32	40	50	63	19	33	54	15,5	17	3	4	5,5

Specification

- Knob
  Aluminium
  black anodized
- Torque mechanism
  Steel, hardened
- Other parts
  Steel, blackened
- Cover cap
  Plastic, light grey
- RoHS compliant

On request

- Other dimensions for d_4 / Length l and d_3
- Other torques
- Torque limiting turning anti-clockwise or turning anti-clockwise and clockwise

Information

Torque knurled knobs / Torque knurled knob screws GN 3663 are used when the manually applied torque is to be limited.

When turned clockwise, the torque mechanical system of the knurled knob triggers an „over-engagement“ as soon as the specified torque is reached. When turning anti-clockwise, the mechanical system locks such that the torque is not limited. When tightening, this will ensure that the maximum permissible torque is not exceeded. On the other hand, the torque necessary for releasing will always be transferred reliably.

After removing the cover and loosening the countersunk screw, the thread or bore insert can be dismantled.

Torque knurled knobs		
1 2 4	1	d_1
GN 3663-62-M12-5,5	2	d_2 (d_3)
	4	Torque

Torque knurled knob screws		
1 2 3 4	1	d_1
GN 3663-27-M4-20-0,7	2	d_4
	3	Length l
	4	Torque

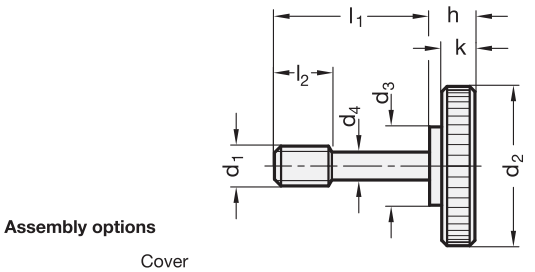

Inox
Stainless
Steel

Assembly options

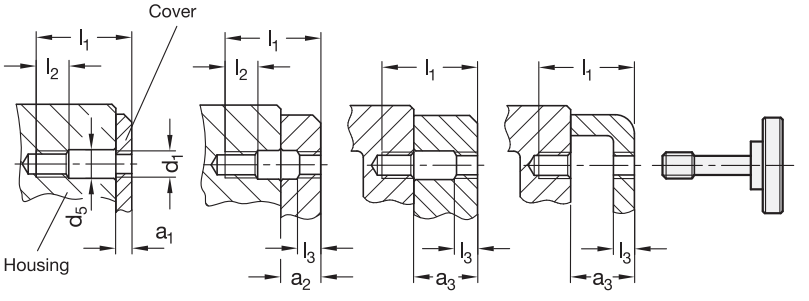

1 d1	2 l1	a1	a2	a3	d2	d3	d4 −0,2	d5	h	k	l2	l3
M 4	15	2-4	4-8	8-10	16	8	3,2	4,5	5,5	3,5	5	2
M 4	17	4-6	6-10	10-12	16	8	3,2	4,5	5,5	3,5	5	2
M 4	19	6-8	8-12	12-14	16	8	3,2	4,5	5,5	3,5	5	2
M 4	21	8-10	10-14	14-16	16	8	3,2	4,5	5,5	3,5	5	2
M 5	18	2,5-4	4-10,5	10,5-12	20	10	4	5,5	6,5	4	6	2,5
M 5	20	4-6	6-12	12-14	20	10	4	5,5	6,5	4	6	2,5
M 5	22	6-8	8-14	14-16	20	10	4	5,5	6,5	4	6	2,5
M 5	26	8-12	12-16	16-18	20	10	4	5,5	6,5	4	6	2,5
M 6	24	3-6	6-13	13-16	24	12	4,8	6,5	8	5	8	3
M 6	26	6-8	8-16	16-18	24	12	4,8	6,5	8	5	8	3
M 6	30	8-12	12-18	18-22	24	12	4,8	6,5	8	5	8	3
M 6	34	12-16	16-22	22-26	24	12	4,8	6,5	8	5	8	3
M 8	30	4-8	8-16	16-20	30	16	6,5	8,5	9	6	10	4
M 8	34	8-12	12-20	20-24	30	16	6,5	8,5	9	6	10	4
M 8	38	12-16	16-24	24-28	30	16	6,5	8,5	9	6	10	4
M 8	42	16-20	20-28	28-32	30	16	6,5	8,5	9	6	10	4

Specification

3

- Steel **ST**
  - Tensile strength class 5 (500 N/mm²)
  - visible face fine turned
  - black oxide finish
- Stainless Steel **NI**
  - AISI 303
  - visible face fine turned
  - matt shot-blasted
- *Stainless Steel characteristics → Page 334*
- RoHS compliant

Information

Knurled screws GN 653.2 can be used for to prevent loss of the thumb screw, due to the d_4 recessed portion of the stud.

When using, instead of a typical tapped and bore hole, it is necessary to provide tapped bores with a thread d_1 on each of the two elements to be assembled. Additionally, a clearance bore of d_5 on one or both sides must be cut.

Depending on the design and required clamping length a_1 ... a_3 of the component being attached, there are a number of assembly options as shown above.

How to order

1 2 3

GN 653.2-M6-30-NI

1	d_1
2	l_1
3	Material

Bull‘s eye levels GN 2277 → *Page 78*
Adjustment plates GN 2277.1 for bull‘s eye levels GN 2277 → *Page 79*
Bull‘s eye levels GN 2278 → *Page 80*
Bull‘s eye levels GN 2279 → *Page 81*
Bull‘s eye levels GN 2280 → *Page 82*
Bull‘s eye levels GN 2281 → *Page 83*

Screw-on levels GN 2282 → *Seite 84*

Definition of terms

A spirit level is a hollow body filled with a fluid and a gas bubble which is used to check the horizontal position of an object. The position of the gas bubble in the fluid shows the angle and the direction at which the object is inclined in relation to the horizontal level.

The function

The hollow body containing the fluid and the gas bubble has a defined radius at its top side, causing the gas bubble to float by its buoyancy always to the highest point.

The transparent upper section normally carries markings or a circle centric to the middle position. If the gas bubble is centered precisely inside the marking and if the air level is properly adjusted, the object to be checked is in the horizontal position.

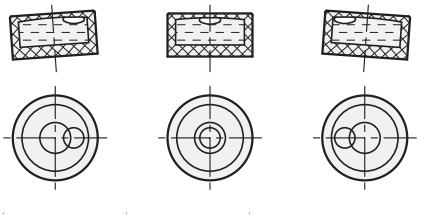

Types of spirit levels

Spirit levels are available as bull´s eye levels or screw-on levels.

Bull´s eye levels simultaneously measure the angle of inclination and the angular position, e.g. of a certain level, whereas screw-on levels indicate the angle of inclination in one dimension only along the axis of the level.

Sensitivity

The sensitivity of spirit levels is given as angle of inclination, e.g. 30 angular minutes or 0,5 degrees. This is the angle of inclination by which the spirit level must be tilted to make the bubble move by 2 mm. A spirit level with a sensitivity of 6 angular minutes therefore has a higher sensitivity than a spirit level with a sensitivity of 30 angular minutes.

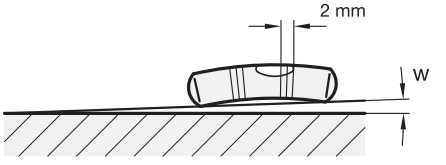

Angle of inclination and difference in altitude

Sensitivity is sometimes also given in millimetre per metre, i.e. as difference in altitude per unit of length.

See also the reference table opposite.

Difference in altitude	Angle w	
in millimetre per metre	in angular minutes	Degree, decimal
0,3	1	0,0167
0,9	3	0,0500
1,7	6	0,1000
2,9	10	0,1667
5,8	20	0,3333
8,7	30	0,5000
11,6	40	0,6667
14,5	50	0,8333
17,5	60	1,0000

Bull´s eye levels

Installation example - Bull´s eye level GN 2277 used in conjunction with levelling elements GN 355

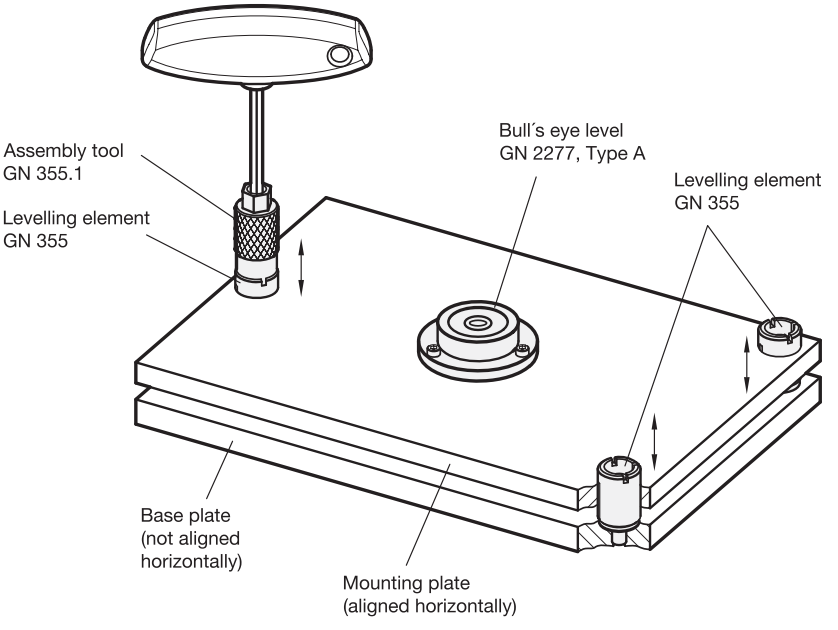

Installation example

Bull´s eye levels and levelling elements - in this example, levelling elements GN 355 and assembly tool GN 355.1 - are ideal to use when a holding plate is to be brought into an exact horizontal position.

Even after the initial adjustment, the bull´s eye level remains in the unit so that the correct alignment can be checked and adjusted again.

see also...

- *Bull´s eye levels GN 2277 → Page 77*
- *Levelling elements GN 355 → Page 162*
- *Assembly tool for levelling elements GN 355.1 → Page 163*

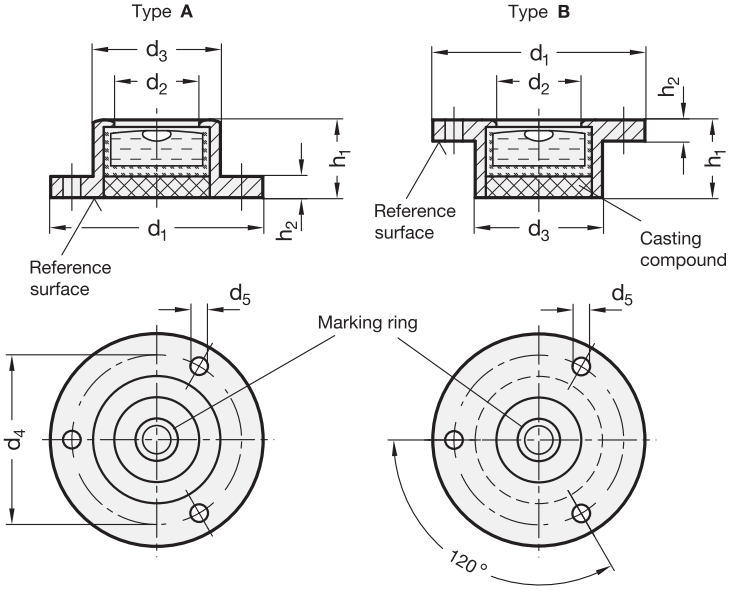

4 Sensitivity

30 Angle minutes, bubble move by 2 mm

5 Type

A Mounting flange for bolting to surface

B Mounting flange for inserting (collar)

2

d_1	d_2	d_3	d_4	d_5	h_1	h_2
20	10	14	17	1,8	10	1,8
25	12	17	21	2,2	10	2
30	12	18	24	3,2	11	3
40	20	28	34,5	3,2	14	4
50	25	34	43	3,2	15	5

Specification

1 **3**

- Housing
  Aluminium
  anodized, natural colour — **ALN**
  anodized, black — **ALS**
- Spirit level element
  Glass plastic body
  Filling
  colourless-transparent — **K**
- Casting compound
  mineral-based
- RoHS compliant

On request

- Filling, green-transparent
- Other sensitivities
- Housing in brass or Stainless Steel

Information

Bull´s eye levels GN 2277 are used to check the horizontal position of jigs, machines, devices, appliances and instruments.

The spirit levels are aligned in relation to the reference surface so that the bubble is located inside the marking ring when the horizontal position of the contact surface is achieved.

see also...
- *General information on bull´s eye levels and screw-on levels* → *Page 76*
- *Adjustment plates GN 2277.1* → *Page 79*

How to order

1 **2** **3** **4** **5**

GN 2277-ALS-50-K-30-A

1	**Material / Finish**
2	**d_1**
3	**Filling**
4	**Sensitivity**
5	**Type**

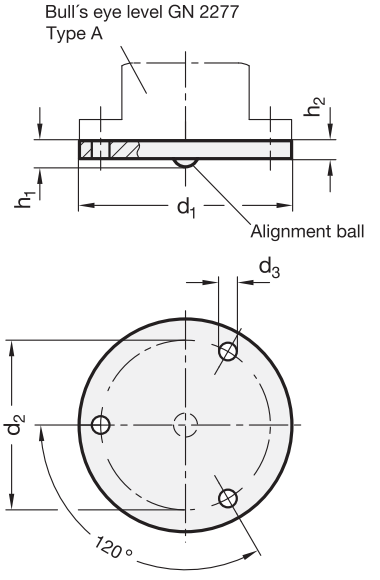

Rost frei Inox Stainless Steel

2

d_1	d_2	d_3	h_1	h_2
20	17	1,8	3,2	1,2
25	21	2,2	3,2	1,2
30	24	3,2	3,2	1,2
40	34,5	3,2	3,2	1,2
50	43	3,2	3,2	1,2

Specification

1

- Stainless Steel AISI 303 **NI**
- Stainless Steel characteristics
  → *Main catalogue page 334*
- RoHS compliant

Information

Adjustment plates GN 2277.1 are used in combination with bull´s eye levels GN 2277, Type A.

The mounting bore holes offset by 120° allow the bull‘s eye levels and the mounting plate to be aligned in relation to the mounting surface. An alignment ball at the bottom surface of the adjustment plate serves as tilting point. Specific tightening torques of the bolts allow to be achieved, so that the bubble is located inside the marking ring once the horizontal alignment is reached.

see also...

- *General information on bull´s eye levels and screw-on levels → Page 76*
- *Bull‘s eye levels GN 2280 (*adjustable*) → Page 82*

How to order		
GN 2277.1-NI-30 (1 2)	1	**Material**
	2	d_1

GN 2278 Bull´s eye levels

for insertion into bore holes

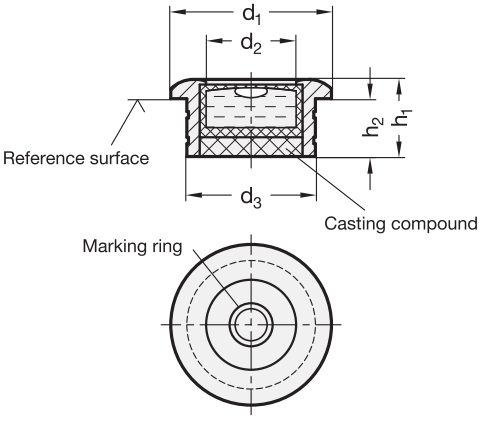

4 Sensitivity

30 Angle minutes, bubble move by 2 mm

2

d_1	d_2	d_3 $^{-0,05}_{-0,15}$	h_1	h_2
20	12	18	10	8
25	14	20	12	9
30	20	28	13	10

Specification

1 **3**

- Housing
  Aluminium
  anodized, natural colour — **ALN**
  anodized, black — **ALS**
- Spirit level element
  Glass plastic body
  Filling
  colourless-transparent — **K**
- Casting compound
  mineral-based
- RoHS compliant

On request

- Filling, green-transparent
- Other sensitivities
- Housing in brass or Stainless Steel

Information

Bull´s eye levels GN 2278 are used to check the horizontal position of jigs, machines, devices, appliances and instruments.

The housing is grooved at its lower diameter d_3, making it easier to mount in place, e.g. by gluing.

The spirit levels are aligned in relation to the reference or contact surface, so that the bubble is located inside the marking ring once the horizontal position of the contact surface is reached.

see also...

- *General information on bull´s eye levels and screw-on levels* → *Page 76*

How to order

1 **2** **3** **4**

GN 2278-ALS-25-K-30

1	**Material / Finish**
2	**d_1**
3	**Filling**
4	**Sensitivity**

GN 2279 Bull´s eye levels

for surface mounting

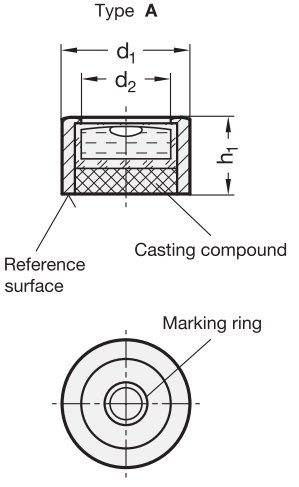

4 Sensitivity

30 Angle minutes, bubble move by 2 mm

5 Type

A with smooth reference surface

B with mounting thread

2

d_1	d_2	d_3	h_1	h_2	h_3
14	10	M 4	7,7	9,5	5
20	14	M 5	13	13	6
30	21	M 6	15	15	7,5

Specification

1 **3**

- Housing
  Aluminium
  anodized, natural colour **ALN**
  anodized, black **ALS**
- Spirit level element
  Glass plastic body
  Filling
  colourless-transparent **K**
- Casting compound
  mineral-based
- RoHS compliant

On request

- Filling, green-transparent
- Other sensitivities
- Housing in brass or Stainless Steel

Information

Bull´s eye levels GN 2279 are used to check the horizontal position of jigs, machines, devices, appliances and instruments.

Type A is used if the spirit level is to be used as a tool, e.g. at different measuring points.

The spirit levels are aligned in relation to the reference or contact surface, such that the bubble is located inside the marking ring once the horizontal position of the contact surface is reached.

see also...

- *General information on bull´s eye levels and screw-on levels* → *Page 76*

How to order

1 **2** **3** **4** **5**

GN 2279-ALS-20-K-30-A

1	Material / Finish
2	d_1
3	Filling
4	Sensitivity
5	Type

GN 2280 Bull´s eye levels

adjustable

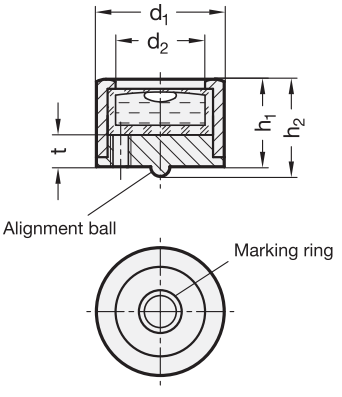

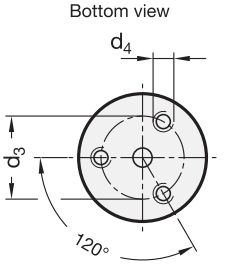

4 Sensitivity

30 Angle minutes, bubble move by 2 mm

2

d_1	d_2	d_3	d_4	h_1	h_2	t
17	13	12	M 3	13	14,5	5
20	13	14	M 3	15	17	5
24	15	16	M 3	17	20	5

Specification

1 **3**

- Housing
  Aluminium
  anodized, natural colour — ALN
  anodized, black — ALS
- Spirit level element
  Glass plastic body
  Filling
  colourless-transparent — K
- Casting compound
  mineral-based
- RoHS compliant

On request

- Filling, green-transparent
- Other sensitivities
- Housing in brass or Stainless Steel

Information

Bull´s eye levels GN 2280 are used to check the horizontal position of jigs, machines, devices, appliances and instruments.

The mounting threads offset by 120° allow the spirit levels to be aligned in relation to the mounting surface. An alignment ball at the bottom surface of the adjustment plate serves as tilting point. Specific tightening torques of the bolts allow to be achieved, so that the bubble is located inside the marking ring once the horizontal alignment is reached.

see also...

- *General information on bull´s eye levels and screw-on levels* → *Page 76*

How to order

1 **2** **3** **4**

GN 2280-ALS-20-K-30

1	Material / Finish
2	d_1
3	Filling
4	Sensitivity

Version **ALS**

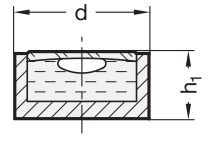

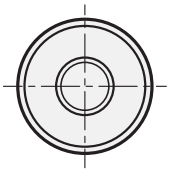

Version **KT**

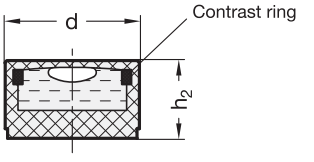

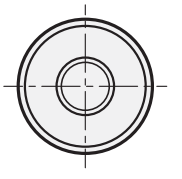

4 Sensitivity

10 Angle minutes, bubble move by 2 mm (only version ALS)

40 Angle minutes, bubble move by 2 mm (only version KT)

5 Identification no.

1 without contrast ring

2 with contrast ring (only version KT for d=12...18)

2

d	h_1	h_2
10	6,9	6
12	6,4	7
14	6,2	8
15	7,4	8
18	7,3	9

Specification

1 **3**

- Housing
  - Aluminium anodized, black Viewing window, glass ● **ALS**
  - Plastic, white Viewing window, transparent ○ **KT**
- Filling
  - colourless-transparent **K**
  - green-transparent (only version KT) **G**
- RoHS compliant

On request

- Other sensitivites

Information

Due to their cylindrical design, bull´s eye levels GN 2281 are suitable for installation in plates and housings where they serve to check the horizontal position of jigs, machines and devices.

Bull´s eye levels are not aligned, i.e. there is no reference to the external outline of the level. The vertical position must be ensured by aligning the holding building element.

The black housing of the version ALS creates a reflection at the edge of the bubble which significantly improves the readability. Version KT is available with contrast ring inside the air level housing (Identification no. 2) which creates the same effect.

Alternatively, the contrast can also be improved by a dark surface inside the mounting bore hole.

see also...

- *General information on bull´s eye levels and screw-on levels* → *Page 76*

How to order

1 **2** **3** **4** **5**

GN 2281-ALS-14-K-10-1

1	**Material / Finish**
2	**d**
3	**Filling**
4	**Sensitivity**
5	**Identification no.**

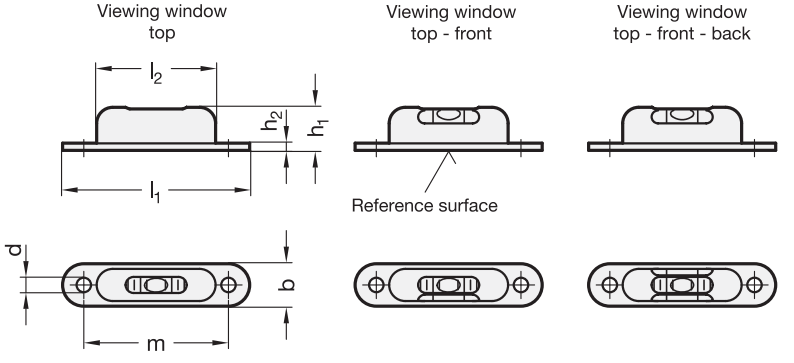

4 Sensitivity

6 Angle minutes, bubble move by 2 mm
50 Angle minutes, bubble move by 2 mm

5 Identification no.

1 Viewing window top
2 Viewing window top - front
3 Viewing window top - front - back

2

l_1	b	d	h_1	h_2	l_2	m
57	12	4,5	13	1	37	45

Specification

1 **3**

- Housing brass
  plastic coated, textured finish
  black, RAL 9005 ● **MSW**
  silver, RAL 9006 ○ **MSR**
- Spirit level element
  Glass plastic body
  Filling
  green-transparent **G**
- Casting compound
  mineral-based
- RoHS compliant

On request

- Filling, colourless-transparent
- Other sensitivities
- Other colours

Information

Screw-on levels GN 2282 are used to check the horizontal position of jigs, machines, devices, appliances and instruments.

The spirit levels are aligned in relation to the finished reference surface so that the bubble is centered in the middle of the marking lines once the horizontal position of the contact surface in the longitudinal direction is reached.

see also...
- *General information on bull´s eye levels and screw-on levels → Page 76*

How to order

1 **2** **3** **4** **5**
GN 2282-MSR-57-G-50-3

1	**Material / Finish**
2	**l_1**
3	**Filling**
4	**Sensitivity**
5	**Identification no.**

Rulers / Indicator arrow

with mounting holes Ø 3,3

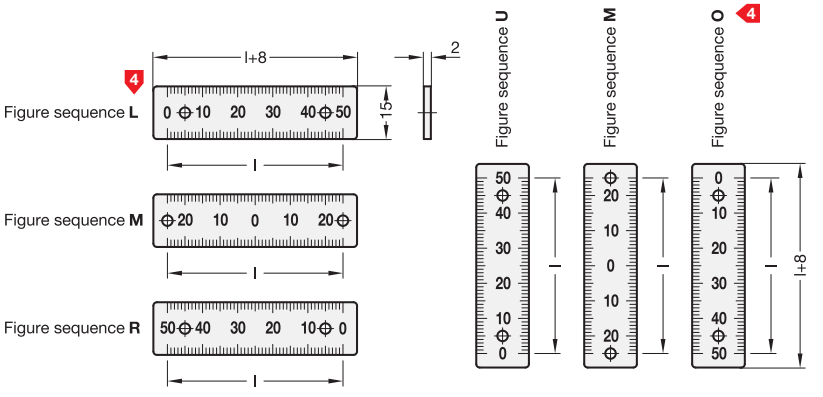

3 Type

W Figures horizontally arranged (Figure sequences L, M,R)

S Figures vertically arranged (Figure sequences U,M,O)

5 Identification No.

1 with mounting holes Ø 3,3

Indicator arrow GN 711.3

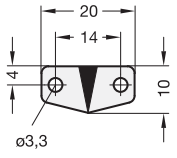

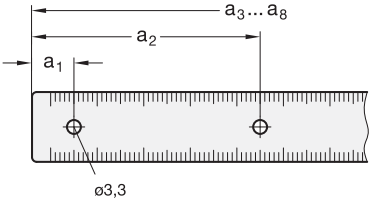

2

Length l Scale	Number Bores	a_1 ±0,1 Figure sequence		a_2 ±0,1 Figure sequence		a_3 ±0,1 Figure sequence		a_4 ±0,1 Figure sequence		a_5 ±0,1 Figure sequence		a_6 ±0,1 Figure sequence		a_7 ±0,1 Figure sequence		a_8 ±0,1 Figure sequence	
		M	L / R 0 / U	M	L / R 0 / U	M	L / R 0 / U	M	L / R 0 / U	M	L / R 0 / U	M	L / R 0 / U	M	L / R 0 / U	M	L / R 0 / U
50	2	4	9	54	49	-	-	-	-	-	-	-	-	-	-	-	-
100	2	9	9	99	99	-	-	-	-	-	-	-	-	-	-	-	-
150	2	4	9	154	149	-	-	-	-	-	-	-	-	-	-	-	-
200	3	9	9	99	99	199	199	-	-	-	-	-	-	-	-	-	-
300	3	9	9	149	149	299	299	-	-	-	-	-	-	-	-	-	-
400	4	9	9	139	139	269	269	399	399	-	-	-	-	-	-	-	-
500	4	9	9	169	169	339	339	499	499	-	-	-	-	-	-	-	-
750*	8	4	9	124	129	254	249	374	369	394	389	504	509	634	629	754	749
1000*	8	9	9	169	169	339	329	499	499	519	519	679	679	839	839	999	999

* These lengths consists of 2 parts.

Specification

1

- Aluminium **AL**
  - natural colour anodized
  - black imprint with numbers and scale etched (i.e., aluminium coloured)
- Imprint resistant to weak acids and lye solutions, and against solvents in the event of brief contact
- RoHS compliant

On request

- self-adhesive version

Information

see also...

- *Rulers GN 711 (Stainless Steel, Plastic, self-adhesive)* → *Main catalogue page 336*

Ruler		
GN 711.2-AL-100-W-L-1 (1 2 3 4 5)	1	Material
	2	Length l
	3	Type
	4	Figure sequence
	5	Identification No.

Indicator arrow		
GN 711.3-AL-1 (1 5)	1	Material
	5	Identification No.

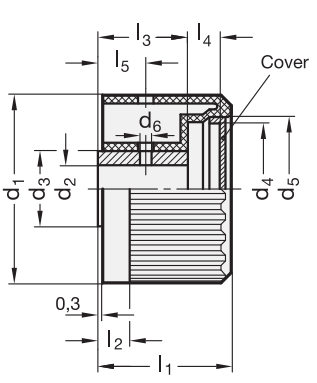

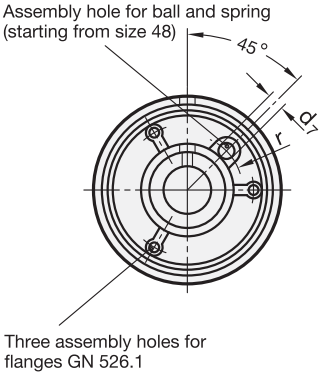

ELESA Original design IZN.380

1	2												
d_1 f7	**d_2** H7 Bore		**d_3**	**d_4**	**d_5**	**d_6**	**d_7**	**l_1**	**l_2**	**l_3**	**l_4**	**l_5**	**r**
32	B 6	-	15	19	21	3	-	26	5	16	8	9	-
37	B 6	-	15	25	27	3	-	29	6	16	10	10	-
42	B 8	-	18	29	31	4	-	32	7	17	11	11	-
48	B 8	-	22	32	34	4	3,2	35	8	22	10	14	14
52	B 10	B 12	22	37	39	4	4,2	39	9	22	13	14	15
58	B 12	-	26	42	44	5	5,2	41	10	27	11	16	17
63	B 12	B 14	26	48	50	5	6,2	44	11	30	10	16	19
80	B 16	-	26	59	62	5	6,2	48	12	30	13	17	24

Specification

- Plastic
  Technopolymer (Polyamide PA)
  - glass fibre reinforced
  - temperature resistant up to 130 °C
  - black, shiny finish
- Bushing
  Steel, blackened
- Cover
  Plastic, light grey
- *ISO-Fundamental Tolerances → Page 323*
- *Plastic characteristics → Page 331*
- RoHS compliant

Information

The light grey cover of the control knobs GN 526 shrouds the fixing components as well as the shaft end. The cover also lends itself for a logo or other symbols.

The cap is mounted by simply pressing it by hand into place. To remove it run the finger with some pressure along its rim.

see also...

- *Control knobs GN 726 (Aluminium) → Main Catalogue Page 342*
- *Control knobs GN 726.1 (Aluminium) → Main Catalogue Page 344*
- *Clamping elements GN 826 (for adjustable spindles) → Page 170*

How to order		
GN 526-42-B8 (1 2)	1	d_1
	2	d_2

GN 526.1 Scale rings

for control knobs GN 526

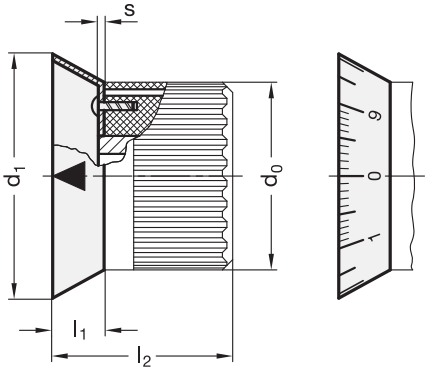

ELESA Original design F.N/F.K/F.GS

2 Type

A with arrow
B neutral
S with scale 0...9
40 and/or 100 graduations

d_0 Control knob Ø GN 526	1 d_1	l_1	l_2	s	Number of Graduation marks Type S
32	38	6	32	0,8	40
37	45	7	36	1	40
42	50	7	39	1	40
48	55	8	43	1	100
52	63	9	48	1	100
58	70	11	52	1	100
63	78	13	57	1	100

Specification

- Aluminium
  anodized, natural colour
- Arrow (Type A)
  and scale (Type S)
  black, printed
- RoHS compliant

On request

- Special graduations
  see „How to order Graduations“
  → *Main Catalogue Page 337*

Information

Scale rings GN 526.1 are supplied separately i.e. not mounted, together with 3 suitable rivets.

Besides the standard scale (Type S) these scale rings can be supplied with any type of graduation.

Regarding design, numbering run, numbering position and numbering sequence of the scale please see the layout for scale knobs on the order sheet „How to order Graduations“ → *Main Catalogue Page 337.*

see also...

- *Control knobs GN 726.2 / GN 723.4 (Aluminium)*
  → *Main Catalogue Page 345 / 348*

How to order		
GN 526.1-50-A (1 2)	1	d_1
	2	Type

Type **A**

2 Bores for socket head cap screw DIN 912 - M4/M5

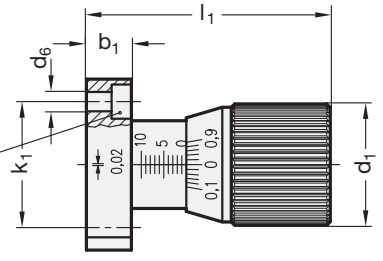

Range extended!

Type **B**

2 Bores for socket head cap screw DIN 912 - M4/M5

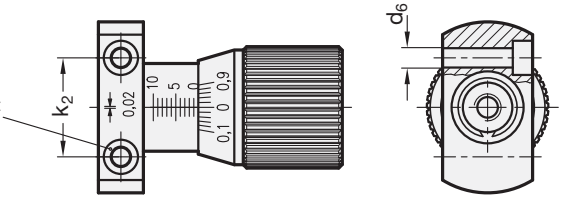

Type **S1**

Hexagon head screw A/F

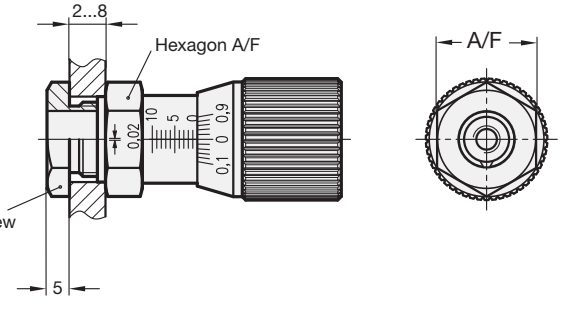

2 Type

A Fixing hole parallel to the spindle axle

B Fixing hole vertical to the spindle axle

S1 Mounting with hexagon head screw

3 Coding

SR with scale 0,1...0,9 50 graduations ascending clockwise

SL with scale 0,1...0,9 50 graduations ascending anti-clockwise

1

d_1	d_2	d_3	d_4	d_5	d_6	d_7	d_8 −0,05 Spigot	d_9	b_1	b_2	h	k_1	k_2	l_1 +0,2	l_2	l_3	l_4	l_5	A/F	w Adjustable range
27	M 6	M 12 x 1	6,4	18	4,3	38	19	12,5	10	20	4,3	28	22	54	19,5	37,5	0,5	1	22	10
34	M 8	M 16 x 1	8,5	23	5,3	50	24	18,3	11	25	4,2	36	30	67	23,5	45,5	0,5	1	27	15

Specification

- Body
  Steel
  matt chrome plated
- Spindel
  Steel
  blank
- Control knob
  Aluminium
  anodized, black
- Hexagon head screw
  Steel
  zinc plated, blue passivated
- Scales engraved with laser precision
- Cover
  Plastic, light grey
- RoHS compliant

Information

Control knobs with adjustable spindle GN 727 allow precise adjustment or aligning i. e. of a positive stop. The spindle thread is without backlash.

The graduations on the control knob are non-abrasive and well legible.

The light grey cover shrouds the fixing components as well as the shaft end.

Regarding design, numbering run, numbering position and numbering sequence of the scale please see the layout for scale rings on the order sheet „How to order Graduations“ → *Main Catalogue Page 337.*

How to order

1 2 3

GN 727-27-A-SR

1	d_1
2	Type
3	Coding

Control knobs with adjustable spindle GN 727 - Complementary dimensions with technical details

Type **A**

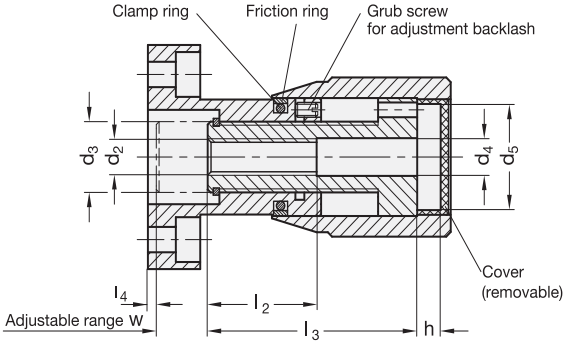

Type **S1**

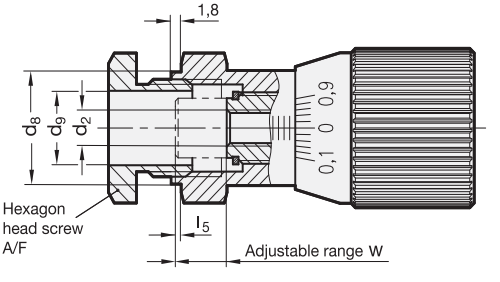

Linear slides

Structure

All linear slides consist of an outer rail with a runner moving inside. Anti-friction bearings, kept at a distance and in position by means of a ball cage, lie between the rail and the runner.

Rail and runner are made of heat treatable steel, enabling their use in industrial environments with higher requirements in terms of load rating, quiet operation and useful service life.

All designs are available in the nominal rail dimensions h1 = 28, 35 and 43 mm and may also be supplied beyond the standard range in lengths from 130 mm to 1970 mm, appropriate for individual requirements.

Linear slides are normally adjusted so that a clearance-free (i.e. moderately pre-stressed) match-up is created between rail and runner. The raceways of the rails and runners are induction hardened, which combined with the antifriction bearings results in lower wear and longer service life. Linear slides are permanently lubricated with a high-grade special grease designed for linear guide rail systems.

Depending on requirements, a variety of different types are available. Sliding distances of the runners are inside, partly outside or entirely outside the length of the rails. Fully extendable telescopic linear slides consist of linear slides directly interconnected at the rails, the runners or with the help of an intermediate profile.

To mount linear slides, countersinks in the rails and, depending on type of construction, threaded or countersunk holes in the runners are available. The compact style is generally advantageous for use in tight spaces.

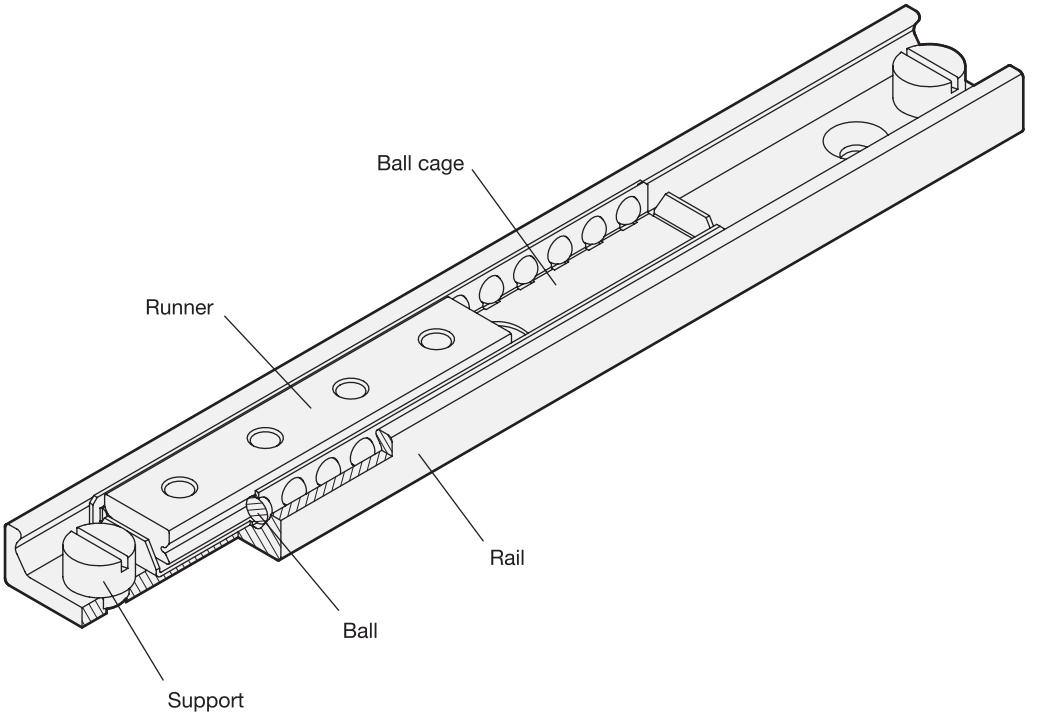

Linear slides with inside traversal distance **GN 2402** → *Page 93*	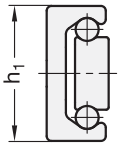	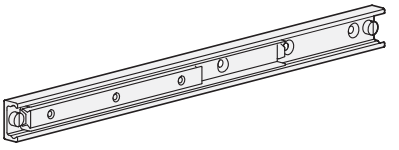
Teleskop-Linear slides with partly outside traversal distance (Partial extension) **GN 2404** → *Page 94*	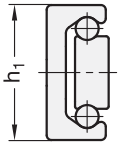	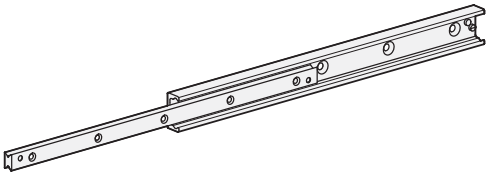
Telescope-Linear slides with S-shaped intermediate profile (Full extension) **GN 2406** → *Page 95*	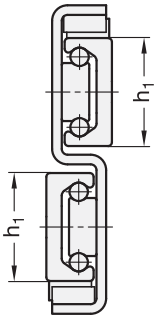	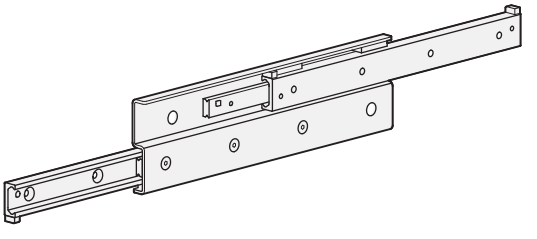
Telescope-Linear slides with rails connected in H-shape (Full extension) **GN 2408** → *Page 96*	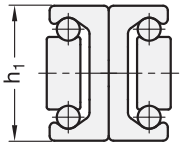	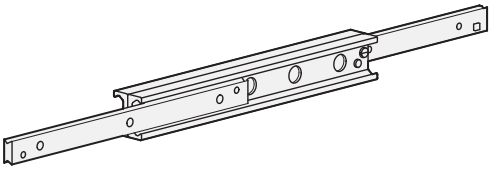
Telescope-Linear slides with runners connected in dual configuration (Full extension) **GN 2410** → *Page 97*	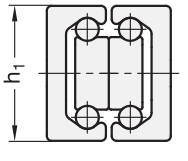	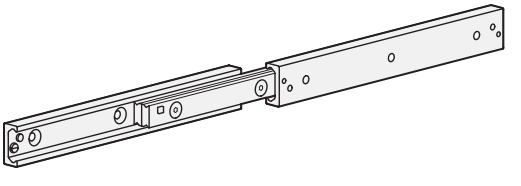

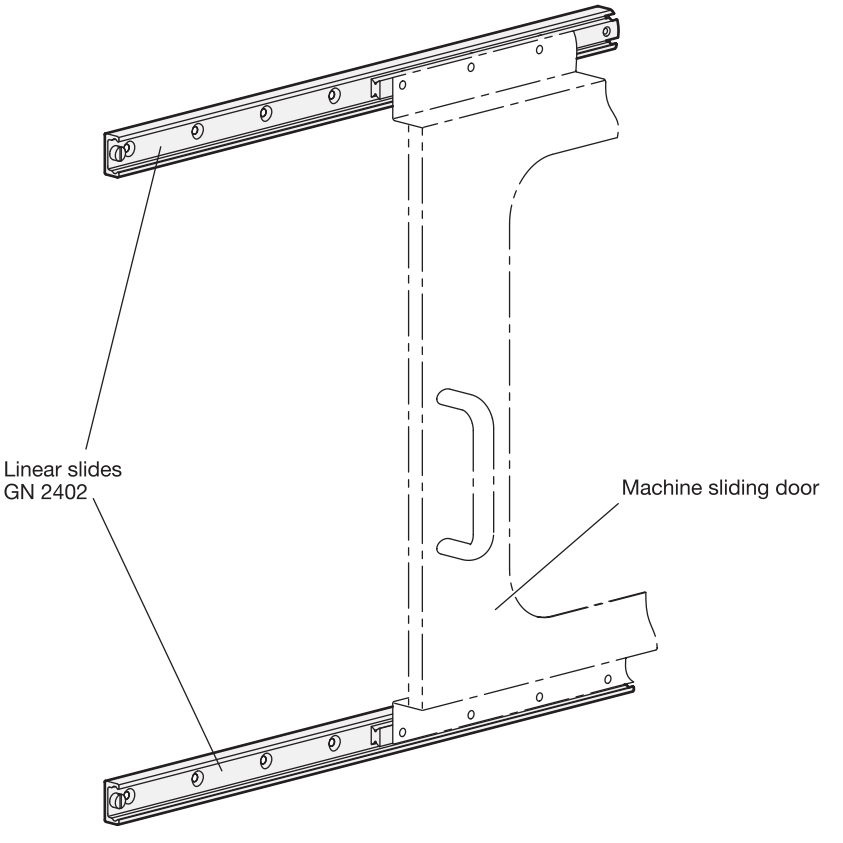
Linear slides
GN 2402
Machine sliding door

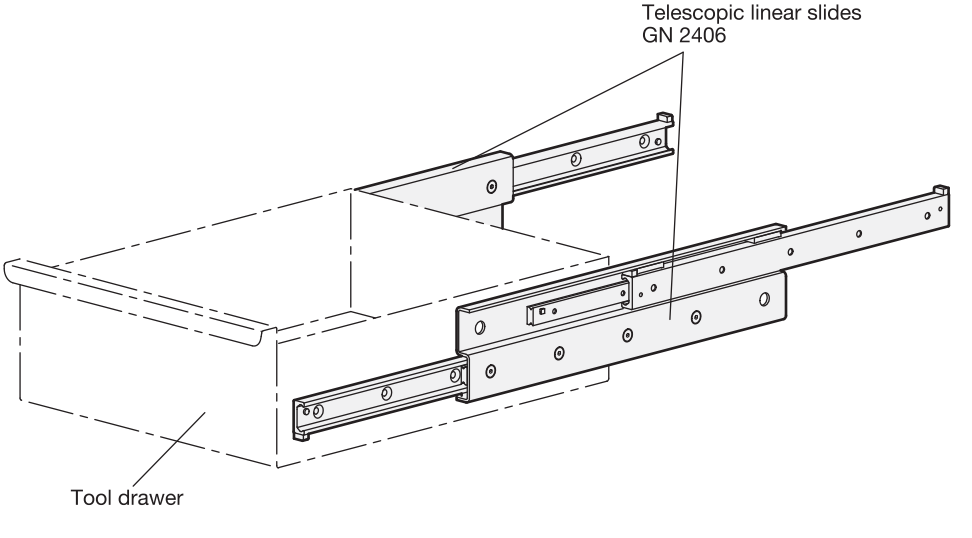
Telescopic linear slides
GN 2406
Tool drawer

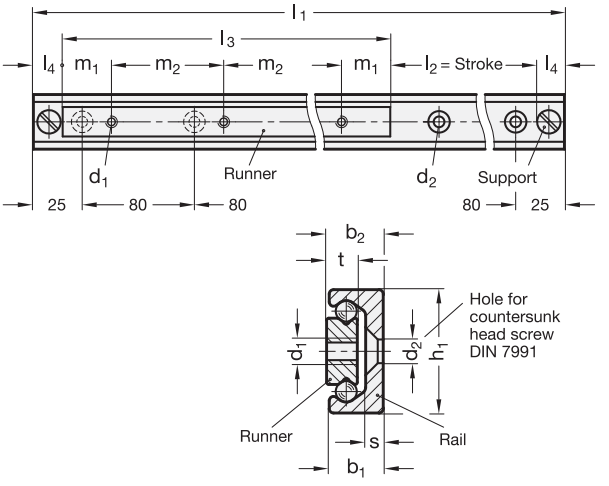

1 h_1	2 l_3	3 l_1 - l_2 Length - Stroke			b_1	b_2	d_1	d_2	l_4 max.	m_1	m_2	s	t
28	60	130 - 34	210 - 114	370 - 274	12,3	12,9	M 5	5,5	18	10	20	4	7
28	80	290 - 174	450 - 334	610 - 494	12,3	12,9	M 5	5,5	18	10	20	4	7
28	130	290 - 124	450 - 284	690 - 524	12,3	12,9	M 5	5,5	18	25	80	4	7
28	210	450 - 204	610 - 364	1010 - 764	12,3	12,9	M 5	5,5	18	25	80	4	7
35	130	290 - 114	450 - 274	770 - 594	16,5	17	M 6	6,5	23	25	80	3,5	10
35	210	450 - 194	690 - 434	1010 - 754	16,5	17	M 6	6,5	23	25	80	3,5	10
35	290	610 - 274	930 - 594	1330 - 994	16,5	17	M 6	6,5	23	25	80	3,5	10
43	210	450 - 194	690 - 434	1010 - 754	21	22	M 8	8,5	23	25	80	4,5	13,5
43	370	770 - 354	1010 - 594	1490 -1074	21	22	M 8	8,5	23	25	80	4,5	13,5

Specification

- Rail / Runner
  Heat treatable steel
  - zinc plated, blue passivated
  - Raceways hardened
- Balls
  Anti-friction bearing steel, hardened
- Ball cage
  Steel, zinc plated
- RoHS compliant

On request

- other lengths (based on the standard lengths grid dimension of 80 mm)
- Special lengths (bore, start and end distances)
- more than one runner, special cages

Information

Linear slides GN 2402 are also known as linear motion bearings. They are used, for example, for storage drawers and sliding doors, or in jigmaking for a sliding motion in a linear direction.

The sliding distance of the runner lies within the length of the rail l_1. External elements should limit the maximum sliding distance; the supports of the rail have been designed to guard against the inadvertent extraction of the runner from the rail.

see also...
- *Linear guide rail systems → Page 100*
- *Load rating of telescopic linear slides → Page 98*

How to order

1 2 3

GN 2402-43-370-1490

1	h_1
2	l_3
3	l_1

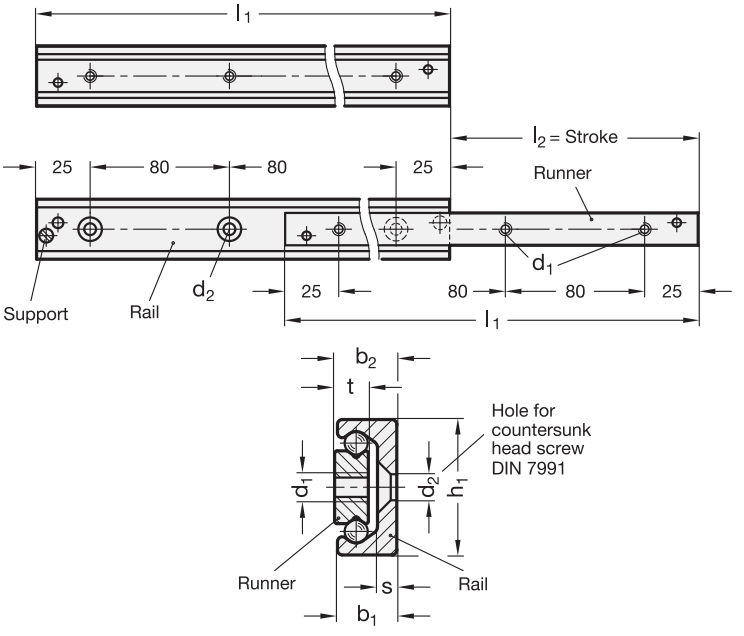

1 h_1	2 l_1 - l_2 Length - Stroke						b_1	b_2	d_1	d_2	s	t
28	130 - 74	210 - 116	290 - 148	370 - 190	450 - 232	530 - 274	12,3	12,9	M 5	5,5	4	7
35	290 - 159	370 - 203	450 - 247	530 - 279	610 - 323	690 - 367	16,5	17	M 6	6,5	3,5	10
43	370 - 208	450 - 243	530 - 278	610 - 313	690 - 363	770 - 398	21	22	M 8	8,5	4,5	13,5

Specification

- Rail / Runner
  Heat treatable steel
  - zinc plated, blue passivated
  - Raceways hardened
- Balls
  Anti-friction bearing steel, hardened
- Ball cage
  Steel, zinc plated
- RoHS compliant

On request

- other lengths (based on the standard lengths grid dimension of 80 mm)
- Special lengths (bore, start and end distances)

Information

Telescopic linear slides GN 2404 are used, for example, for storage drawers and sliding doors, or in jigmaking for a sliding motion in a linear direction.

If the support screw is removed on both sides, the sliding distance extends the length of the rail plus an additional distance of slightly more than half the length of the rail.

External elements should limit the maximum sliding distance; the supports of the rail have been designed to guard against the inadvertent extraction of the runner from the rail.

see also...
- *Linear guide rail systems* → *Page 100*
- *Load rating of telescopic linear slides* → *Page 98*

How to order		
GN 2404-28-290	1	h_1
	2	l_1

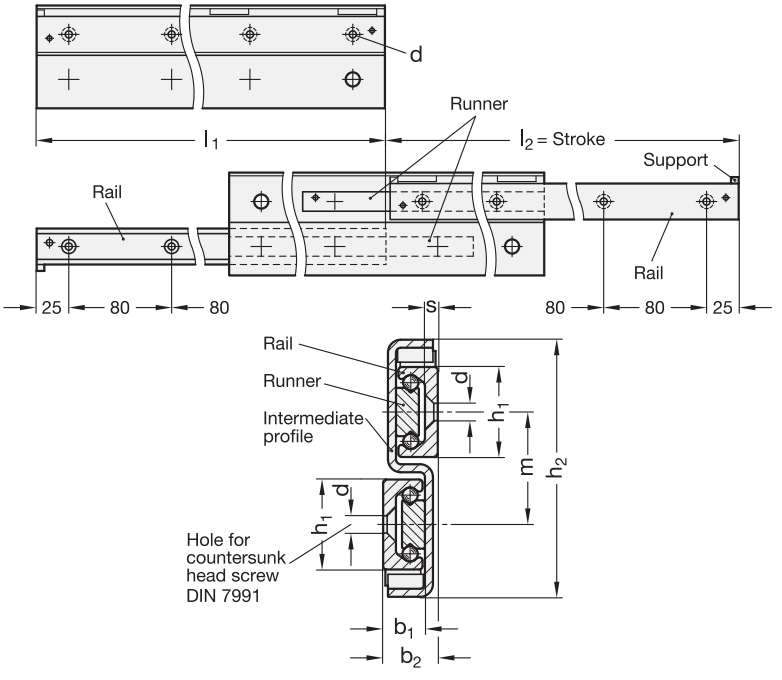

3 **Type**

E with one side extension

1 **2**

h_1	l_1 - l_2 Length - Stroke					b_1	b_2	d	h_2	m	s
28	290 - 296	370 - 380	450 - 464	530 - 548	610 - 630	12,3	17	5,5	80	35	4
35	450 - 494	530 - 558	690 - 734	850 - 886	-	16,5	22,5	6,5	97	43	3,5
43	530 - 556	690 - 726	850 - 866	1010 - 1036	1490 - 1516	21	28	8,5	117	52	4,5

Specification

- Rail / Runner
  Heat treatable steel
  - zinc plated, blue passivated
  - Raceways hardened
- Balls
  Anti-friction bearing steel, hardened
- Ball cage
  Steel, zinc plated
- Intermediate metal sheet of the ball cage
  Steel, zinc plated
- RoHS compliant

On request

- other lengths (based on the standard lengths grid dimension of 80 mm)
- Special lengths (bore, start and end distances)
- Extensions on both side of each rail (Type D)

Information

Telescopic linear slides GN 2406 consist of two slides linked by an intermediate profile. They are used when the lateral space requires a small width, and when large extension is required. The S-shape of the intermediate profile gives the configuration a high degree of sturdiness.

The rails and the intermediate profile are equal in length. Both rails can be extended so that an extension is reached which is longer than the base length l_1.

External elements should limit the maximum sliding distance; the supports of the rail have been designed to guard against the inadvertent extraction of the runner from the rail.

see also...
- *Linear guide rail systems* → *Page 100*
- *Load rating of telescopic linear slides* → *Page 99*

How to order

1 **2** **3**

GN 2406-28-530-E

1	h_1
2	l_1
3	Type

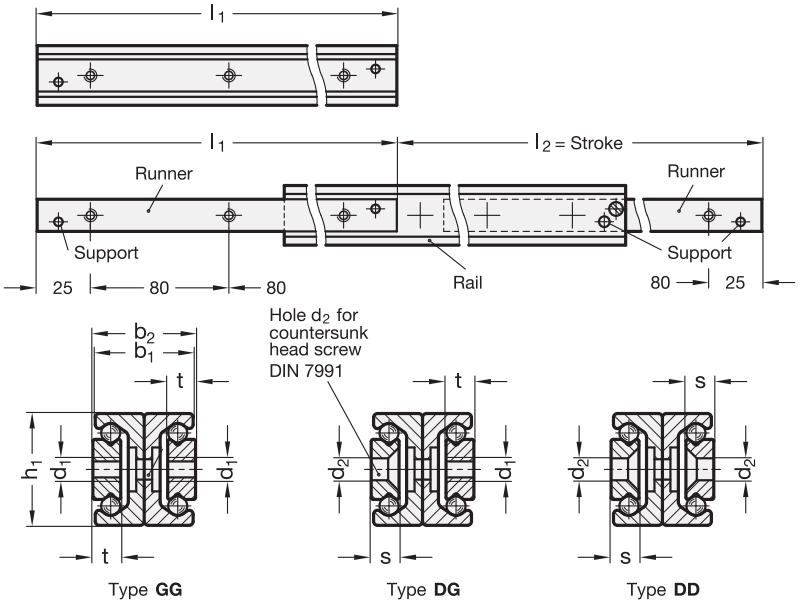

3 Type

GG Runner
with thread, on both sides

DG Runner
1 x with countersunk
and 1 x with thread

DD Runner
with countersunk
on both sides

1 h_1	2 l_1 - l_2 Length - Stroke				b_1	b_2	d_1	d_2	s	t
28	210 - 232	370 - 380	450 - 464	530 - 548	24,6	25,8	M 5	5,5	4	7
35	370 - 406	450 - 494	530 - 558	610 - 646	33	34	M 6	6,5	3,5	10
43	450 - 486	610 - 626	770 - 796	930 - 966	42	44	M 8	8,5	4,5	13,5

Specification

- Rail / Runner
  Heat treatable steel
  - zinc plated, blue passivated
  - Raceways hardened
- Balls
  Anti-friction bearing steel, hardened
- Ball cage
  Steel, zinc plated
- Rail connection
  - Blank rivets, St. Steel (h_1 = 28 and 35)
  - Screws, Steel zinc plated (h_1 = 43)
- RoHS compliant

On request

- other lengths (based on the standard lengths grid dimension of 80 mm)
- Special lengths (bore, start and end distances)

Information

Telescopic linear slides GN 2408 consist of two interconnected linear slides. They are used, for example, in handling or automation applications and in jigmaking, for straight-line traversal distance when large extension and a low construction height of the rail are required. The H-shape of the rails profile gives the configuration a high degree of sturdiness.

The rails and runner are equal in length. Both rails can be extended so that an extension is reached which is longer than the base length l_1. Removing the support screws from the rails allows a stroke of the runners on both sides.

External elements should limit the maximum sliding distance; the supports of the rail have been designed to guard against the inadvertent extraction of the runner from the rail.

see also...
- *Linear guide rail systems* → *Page 100*
- *Load rating of telescopic linear slides* → *Page 99*

How to order

1 2 3

GN 2408-28-450-DG

1	h_1
2	l_1
3	Type

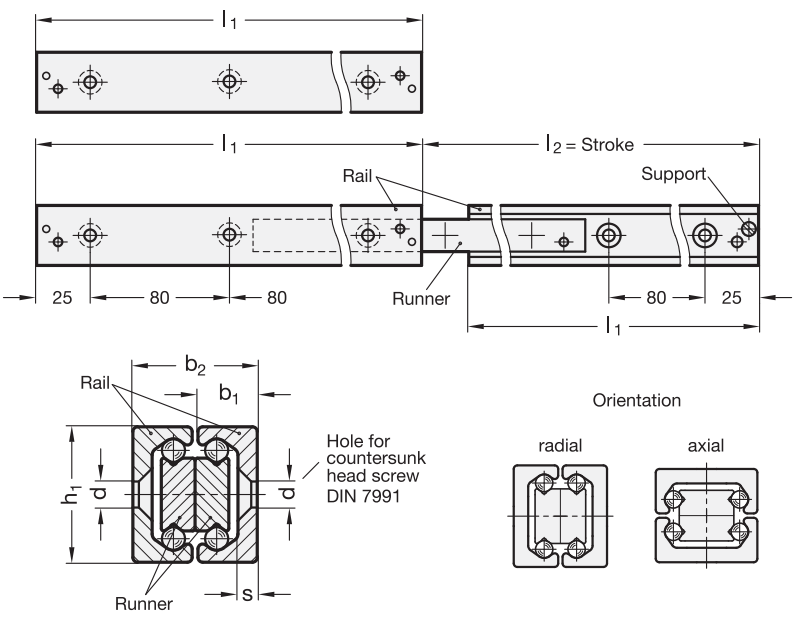

1 h_1	2 l_1 - l_2 Length - Stroke				b_1	b_2	d	s
28	210 - 232	370 - 380	450 - 464	530 - 548	12,3	25,8	5,5	4
35	370 - 406	450 - 494	530 - 558	610 - 646	16,5	34	6,5	3,5
43	450 - 486	610 - 626	770 - 796	930 - 966	21	44	8,5	4,5

Specification

- Rail / Runner
  Heat treatable steel
  - zinc plated, blue passivated
  - Raceways hardened
- Balls
  Anti-friction bearing steel, hardened
- Ball cage
  Steel, zinc plated
- Rail connection
  Screw
  Steel, zinc plated
- RoHS compliant

On request

- other lengths (based on the standard lengths grid dimension of 80 mm)
- Special lengths (bore, start and end distances)

Information

Telescopic linear slides GN 2410 consist of two linear motion ball slide rails connected at the runners. They are used, for example, in material handling or automation applications, or in jigmaking, to achieve a sliding motion in a linear direction when long extensions with low construction height of the rail are required.

The dual configuration has the advantage that both the radial and axial load capacities are identical. Meanwhile this design has proven less susceptible to dirt in practical use.

The rails and runners are equal in length. Both runners can be extended so that an extension is reached which is longer than the rail base length l_1. Removing the support screws from the rails, allows an extension of the rails on both sides.

External elements should limit the maximum sliding distance; the supports of the rail have been designed to guard against the inadvertent extraction of the runner from the rail.

see also...
- *Linear guide rail systems* → *Page 100*
- *Load rating of telescopic linear slides* → *Page 99*

How to order		
GN 2410-35-610 (1 2)	1	h_1
	2	l_1

Load rating of telescopic linear slides

in ascending order of the standard numbers

When selecting a suitable linear slide, it is primarily the available space, the desired stroke and the load carried which must be taken into consideration. The values listed below are intended as guidelines for selecting the most suitable nominal rail size.

The details on load rating are non-binding guide values given without liability and does not constitute any type of guarantee or warranty of its intended use. The user must determine in each individual case whether a product is suitable for the intended application. Environmental factors and aging may affect the stated values.

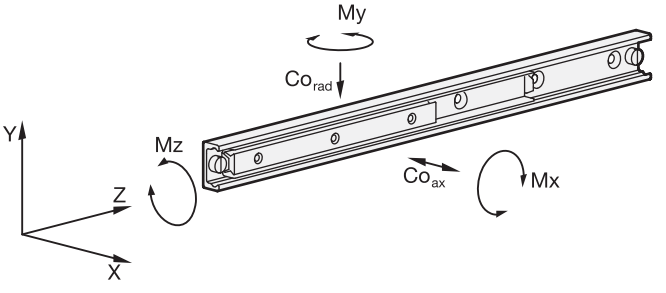

Static load rating

Article No.	Load ratings		Permissible load torques		
	$C_{O_{rad}}$ in N	$C_{O_{ax}}$ in N	M_x in Nm	M_y in Nm	M_z in Nm
GN 2402 -28- 60-...	3580	2500	37	25	18
-28- 80-...	4780	3345	65	45	23
-28-130-...	7765	5435	166	117	38
-28-210-...	12545	8780	430	300	62
-35-130-...	9980	6985	219	156	50
-35-210-...	16125	11290	560	397	87
-35-290-...	22270	15590	1085	745	109
-43-210-...	23140	16200	790	552	157
-43-370-...	40775	28540	2445	1710	275
GN 2404 -28-130	645	452	30	23	17
-28-210	1165	816	86	60	27
-28-290	2015	1410	190	135	41
-28-370	2540	1780	309	215	52
-28-450	3065	2145	540	316	64
-28-530	3595	2515	625	435	74
-35-290	2100	1470	218	155	56
-35-370	2685	1880	348	247	69
-35-450	3270	2285	515	365	80
-35-530	4350	3045	787	553	101
-35-610	4930	3450	1025	722	113
-35-690	5510	3860	1295	914	125
-43-370	3540	2480	444	313	119
-43-450	4905	3435	735	514	151
-43-530	6305	4415	1090	766	184
-43-610	7725	5410	1525	1065	210
-43-690	8185	5730	1850	1295	240
-43-770	9490	6530	2405	1685	273

Load rating of telescopic linear slides

in ascending order of the standard series numbers

Article No.	Load ratings $C_{O_{rad}}$ in N
GN 2406 -28- 290-E	587
-28- 370-E	793
-28- 450-E	999
-28- 530-E	1205
-28- 610-E	1510
-35- 450-E	1265
-35- 530-E	1700
-35- 690-E	2150
-35- 850-E	2830
-43- 530-E	2140
-43- 690-E	2885
-43- 850-E	4010
-43-1010-E	4755
-43-1490-E	3820

Article No.	Load ratings $C_{O_{rad}}$ in N
GN 2408 -28-210-...	447
-28-370-...	1000
-28-450-...	1205
-28-530-...	1140
-35-370-...	1035
-35-450-...	1265
-35-530-...	1705
-35-610-...	1930
-43-450-...	1890
-43-610-...	3035
-43-770-...	3145
-43-930-...	2580

Article No.	Load ratings $C_{O_{rad}}$ in N
GN 2410 -28-210	444
-28-370	496
-28-450	405
-28-530	342
-35-370	534
-35-450	439
-35-530	403
-35-610	346
-43-450	1370
-43-610	1115
-43-770	870
-43-930	714

No details on the permissible load torques are given for the telescopic linear slides as these are normally used for paired applications. Loads of these dimensions occur to a minor degree because it may be assumed that the surrounding construction has sufficient rigidity and stiffness. Transferring load torques within certain limited is permitted.

Static load and deflection

The load values given in the tables refer to a maximum permissible force allowed to act in the middle of the fully extended profile rail at the third segment.

If the given values are observed and if the telescopic linear slide is fully extended, a minor deflection (sag) occurs at the end of the runner or of the rail. This has normally no detrimental effect on the proper function of the application. If required, guide values may be given if requested.

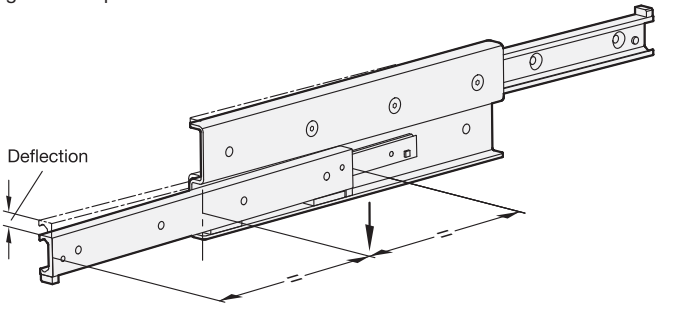

Mounting screws, assignment of the mounting holes

The standard mounting hardware is DIN 7991-10.9 countersunk head screws, to be mounted with the recommended tightening torque. Depending on type, not all mounting holes may be utilized. In general, these holes can be left unused. In exceptional cases, especially in bilateral stroke, mounting holes can be accessed by loosening the support screws and by pulling out the runner. The support screws are then put back in place.

Traversal speed, cage slip

The traversal speed in linear slides can be as much as 0,8 m/s. The particular application and the installation length can have an effect on this value. In the event of rapid changes of direction and high accelerating forces, cage slip may occur in some cases, especially in long ball cages. In cases such as these, the cage does not move synchronously with half the speed of the runner, but gradually loses its correct position owing to the slip. Whenever possible, running a blank stroke to the end of the traversal distance should be provided for back positioning.

Linear guide rail systems allow the reliable and economical linear movement of hardware modules. Their outstanding attributes are low-maintenance operation, long service life and quiet running. These are attributes which make roller guide systems indispensable components for efficient and safe movement of devices, and meet the needs of facilities with low energy requirements.

The product range includes all components necessary for constructing linear guide rail systems that are compact and easy to assemble and install. All inear guide rail systems consist of one outer rail with rollers or roller carriages moving inside the rail.

Rails are the foundations for linear guide rail systems. They can be constructed as fixed or floating bearing versions, with the fixed bearing type guiding the rollers running inside the rail on two levels, while the floating bearing type does so only on one level. By combining both versions, any misalignments or parallelism errors in the connected construction can be corrected. Complex preliminary work caused by the precision machining of surrounding parts can thus be kept to a minimum. Both rail versions can be mounted in one of two ways: cylindrical countersunk holes, or 90° conical holes for self-centering.

Cam roller carriages are available in 3 different types of designs, differing by their radial or axial assembly arrangement, their material, and their degree of sealing. All cam roller carriages consist of 3 rollers, with the middle one always supplied with an eccentrically adjustable bearing pivot for determining the initial tension or the clearance/play inside the rail. Depending on the rail version, a wiper is mounted on either end of the roller carriage.

Cam rollers are similar in structure to deep-groove ball bearings, with a non-detachable bearing pivot used as mounting point.

For special applications, cam rollers and wipers can also be supplied separately from the cam roller carriages under separate standards.

All design variants are available in the nominal rail dimensions h_1 = 18, 28, 35 and 43 mm. Beyond the standard range, they can also be supplied in lengths of up to 3600 mm in one piece, or as combined rails for individual and customized requirements.

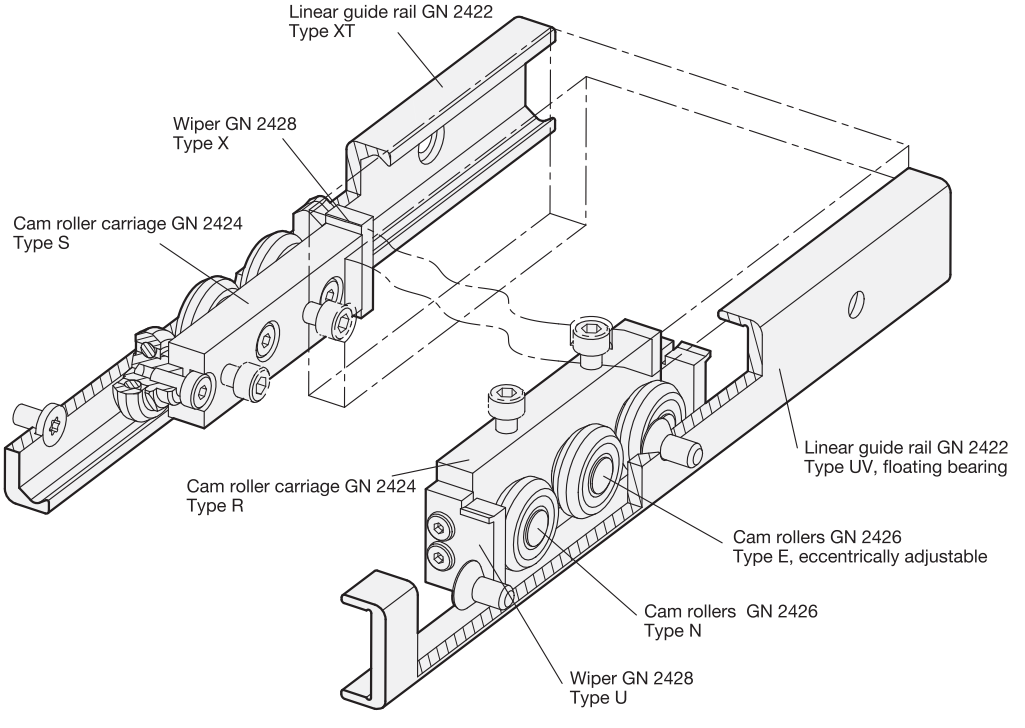

To insure maximum flexibility, linear guide rail systems are made from the components listed below. Depending on the requirement, the appropriate components can be supplied in the desired quantity. Because the linear guide rails and the cam roller carriages must be assembled separately in many applications, these items will be supplied unassembled and packed separately.

Upon request, fully pre-assembled linear guide rail systems including rails GN 2422 and cam roller carriages GN 2424 are available.

Cam roller linear guide rails
GN 2422 → *Page 103*

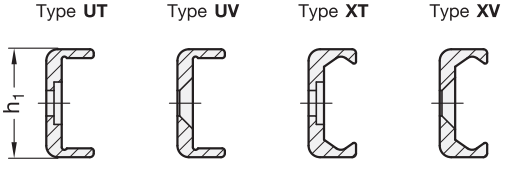

Floating bearing rails — Fixed bearing rails

Cam roller carriages
for rails
GN 2424 → *Page 104/105*

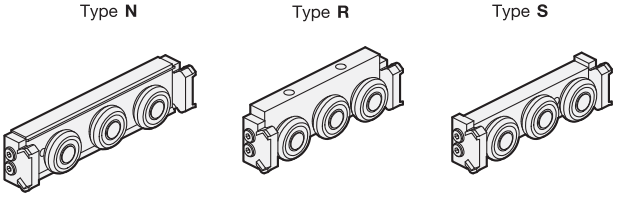

Normal cam roller carriages — Radial cam roller carriages — Narrow cam roller carriages

Cam rollers
for rails
GN 2426 → *Page 106*

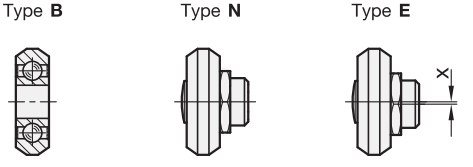

Roller with bore — Normal roller with centered bearing mounting point — Eccentric roller with eccentrical bearing mounting point

Wipers
for rails
GN 2428 → *Page 107*

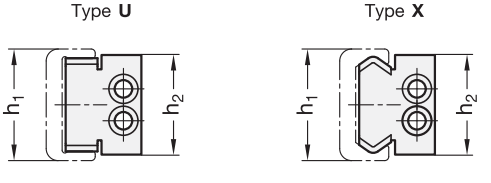

for floating bearing rails — for fixed bearing rails

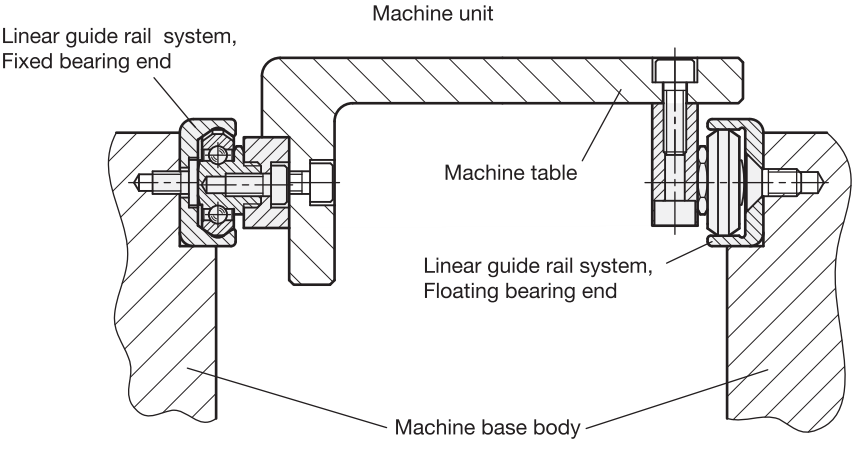
Machine unit
Linear guide rail system,
Fixed bearing end
Machine table
Linear guide rail system,
Floating bearing end
Machine base body

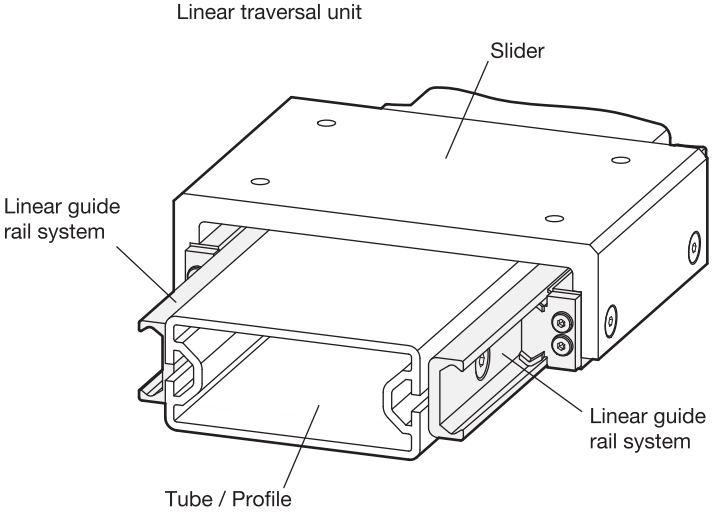
Linear traversal unit
Slider
Linear guide
rail system
Linear guide
rail system
Tube / Profile

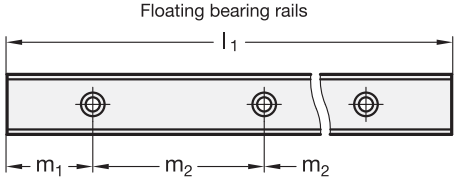

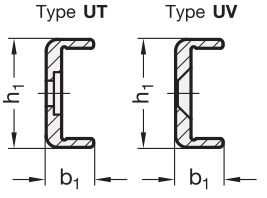

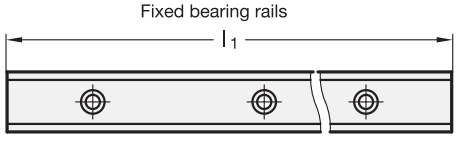

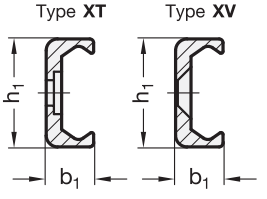

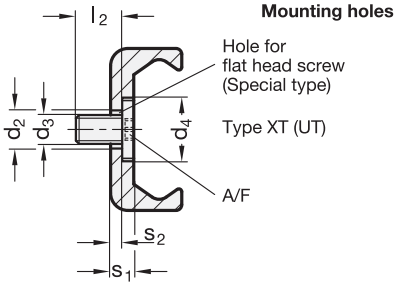

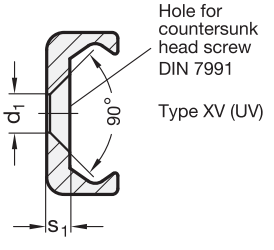

4 Type

UT Floating bearing rail, with mounting hole for flat head screw

UV Floating bearing rail, with mounting hole for countersunk screw

XT Fixed bearing rail, with mounting hole for flat head screw

XV Fixed bearing rail, with mounting hole for countersunk screw

1	2							3										
h_1	l_1							m_1	b_1	d_1	d_2	d_3	d_4	l_2	m_2	s_1	s_2	A/F
18	240	400	560	800	1040	1200	-	40	8,3	4,5	5	M 4	9,5	8	80	2,8	0,8	T20
28	400	560	800	1040	1200	1440	-	40	12,3	5,5	6,4	M 5	11	10	80	4	2	T25
35	400	560	800	1040	1200	1440	-	40	16,5	6,5	8	M 6	15	12	80	3,5	0,8	T30
43	400	560	800	1040	1200	1520	2000	40	21	8,5	10,5	M 8	18	16	80	4,5	1,5	T40

Specification

- Heat treatable steel
  - zinc plated, blue passivated
  - Raceways hardened, ground
- Flat headed screws (only for type UT / XT)
  Steel
  zinc plated, blue passivated
- RoHS compliant

Accessory

- Cam roller carriages GN 2424 → *Page 104*
- Cam rollers GN 2426 → *Page 106*

On request

- other rail lengths (up to max. 3600 mm)
- other mounting hole distances m_1 / m_2

Information

Cam roller linear guide rails GN 2422 can be combined with cam roller carriages GN 2424 or cam rollers GN 2426 to construct linear guide rail systems. These space-saving units are used, for example, for carrying sliding doors, or in mechanical engineering or jigmaking for the linear movement of plant equipment.

These systems feature high stability and quiet running at high traversal speeds. Thanks to the option of combining fixed and floating bearing rails, they cause no great stress to the surrounding construction, and thus allow parallelism errors to be compensated for. Flat head screws with extra low head are included with the rail types UT and XT.

see also...
- *Linear guide rail systems* → *Page 100*
- *Load rating of linear guide rail systems* → *Page 108*

How to order

1 2 3 4
GN 2422-35-1040-40-XT

1	h_1
2	l_1
3	m_1
4	Type

GN 2424 Cam roller carriages

for cam roller linear guide rails GN 2422

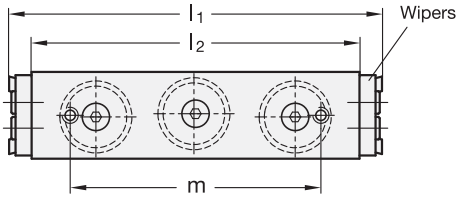

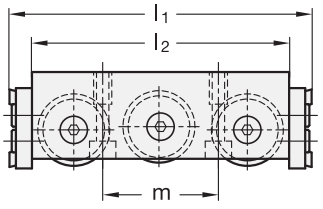

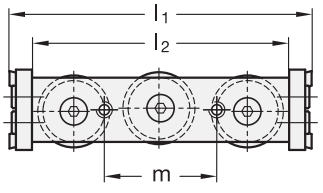

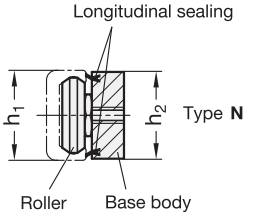

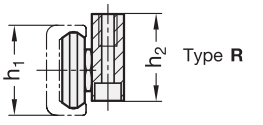

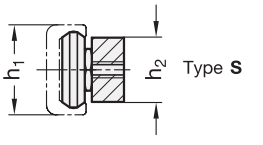

2 Type

- **N** Normal roller carriage, central arrangement
- **R** Radial roller carriage, lateral arrangement
- **S** Narrow roller carriage, central arrangement

3 Version

- **U** with wiper for floating bearing rail (U-rail)
- **X** with wiper for fixed bearing rail (X-rail)

1

Type **N**

h_1 Rail	b_1	b_2	b_3	d_1	d_2	h_2	l_1	l_2	m	A/F
18	8,3	16,5	7,2	14	M 5	17	94	80	52	8
28	12,3	24,1	10	22,4	M 6	25	116	102	78	13
43	21	37,5	15	35	M 8	40	148	134	114	15

Type **S** / Type **R**

h_1 Rail	b_1	b_2 Type S	b_2 Type R	b_3 Type S	b_3 Type R	d_1	d_2	d_3	h_2 Type S	h_2 Type R	h_3	l_1	l_2	m Type S	m Type R	s	t	A/F
18	8,3	15	17,3	5,7	8	14	M 5	M 4	9,5	20	4	74	60	20	20	17	8	8
28	12,3	23,8	24,1	9,7	10	22,4	M 6	M 5	15	30	4	94	80	35	36	24,5	10	13
35	16,5	30	30	12	12	28	M 8	M 6	20	36	3	114	100	45	45	29,5	15	15
43	21	37	37,5	14,5	15	35	M 8	M 6	25	45	4	134	120	55	56	38,5	16	15

Specification

- Base body
  - Aluminium (Type N)
  - Steel (Type R / Type S) zinc plated, blue passivated
- Rollers
  - Anti-friction bearing steel, hardened
  - Ball mounted, sealed (2RS)
  - permanent lubrication
- Wiper
  - Plastic, PUR, grey
  - Steel insert, zinc plated
- RoHS compliant

On request

- Cam roller carriages with more than 3 rollers
- other roller arrangements

Information

Cam roller carriages GN 2424 are combined with cam roller linear guide rails GN 2422 to build cam roller linear guide rail systems. They are used in mechanical engineering or jigmaking for the linear movement of plant equipment.

Depending on cam roller carriage type, these can be mounted in axial or radial direction to the roller axes. Also depending on rail type, matching wipers are mounted, with type N featuring additional sealing lips in longitudinal direction.

see also...

- *Cam roller linear guide rails GN 2422 → Page 103*
- *Cam rollers GN 2426 → Page 106*
- *Cam roller linear guide rail systems (Technical information etc.) → Page 110*

How to order

1 2 3

GN 2424-35-S-X

1	h_1
2	Type
3	Version

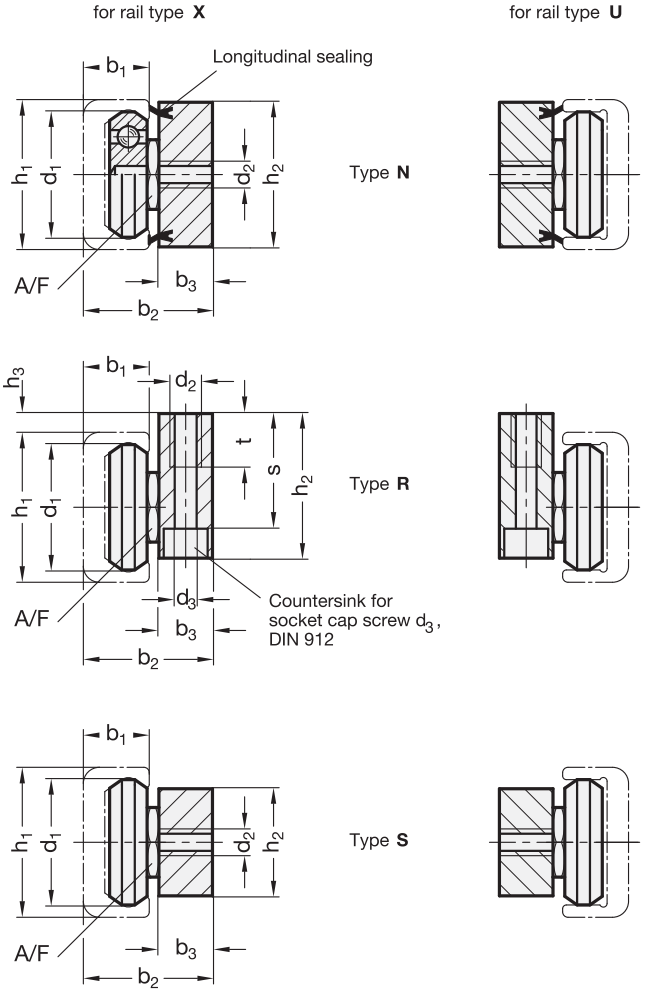

Assembly information

The initial tension or the clearance of the cam roller carriage in the rail can be determined during assembly. Both outer rollers carry the cam roller carriage, with the middle roller (for eccentric adjustment) supporting the carriage on the opposing rail side. Detailed assembly instructions and the necessary tool are included with every cam roller carriage.

If required, the open-end wrench may also be ordered separately (GN 2424.1), with two sizes being available:

A/F_1 / A/F_2 = 8 for construction size with h_1 = 18, Article No. **GN 2424.1-8-8**

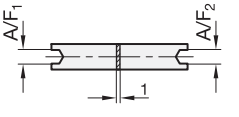

A/F_1 = 13 and A/F_2 = 15 for construction size with h_1 = 28 / 35 / 43, Article No. **GN 2424.1-13-15**

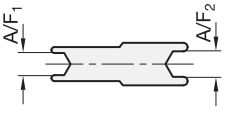

GN 2426 Cam rollers

for cam roller linear guide rails GN 2422

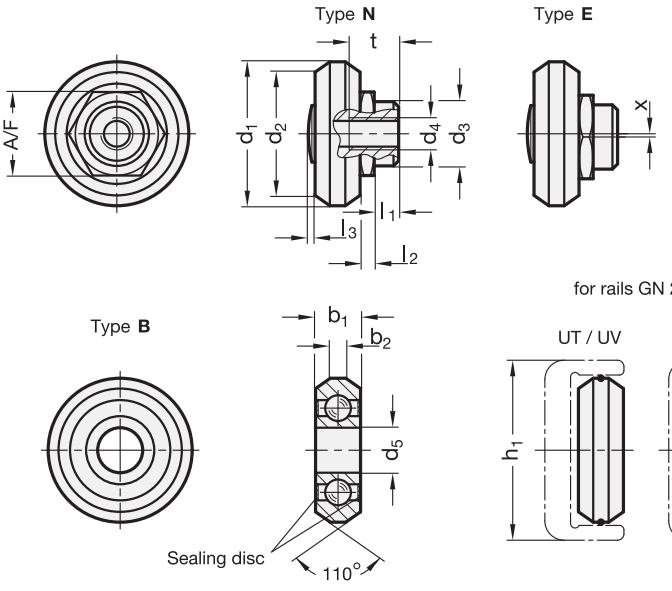

2 Type

- **B** Roller with bore
- **N** Normal roller with centered bearing mounting point
- **E** Eccentric roller with eccentric bearing mounting point

1

h_1 Rail	b_1	b_2	d_1	d_2	d_3 -0,05	d_4	d_5 -0,008	l_1	l_2	l_3 max.	A/F	t	x
18	4	1,6	14	12,4	6	M 4	5	1,8	1,5	0,5	8	5	0,4
28	7	2,4	22,4	19,2	10	M 5	7	3,8	2,2	0,6	13	8	0,5
35	7,5	3,3	28	25,1	12	M 5	8	4,2	2,5	0,7	15	9	0,7
43	11	5	35	30,8	12	M 6	10	4,3	2,5	0,7	15	11	0,8

Specification

3

- Roller
  - Anti-friction bearing steel, hardened
  - Dust and splash water protected
  - permanent lubrication
- Sealing disc
  Plastic (NBR) **2RS**
- Bearing pivot
  Steel
  zinc plated, blue passivated
- RoHS compliant

On request

- Sealing discs, sheet metal profile with gap seal (2Z)

Information

Cam rollers GN 2426 are combined with cam roller linear guide rails GN 2422 to build individual and space-saving linear guide rail systems.

Outer rim surfaces of the rollers are slightly convex, so that in conjunction with the correspondingly-shaped bearing rails (Type XT or XV) there is an accurate and smooth run across four contact points. The same applies to floating bearing rails (Type UT or UV), but with only two contact points.

Combined with the rail, clearance freedom or the initial tension of several rollers can be determined during assembly by using the adjustable eccentrical roller (Type E). The required open-end wrench GN 2424.1 is available separately.

The sealed and permanently lubricated rollers guarantee long service life and superior running performance.

see also...
- *Cam roller linear guide rails GN 2422* → *Page 103*
- *Linear guide rail systems (Technical information, load rating)* → *Page 110*

How to order		
1 2 3	1	h_1
GN 2426-35-N-2RS	2	Type
	3	Material of the sealing

GN 2428 Wipers

for cam roller linear guide rails GN 2422

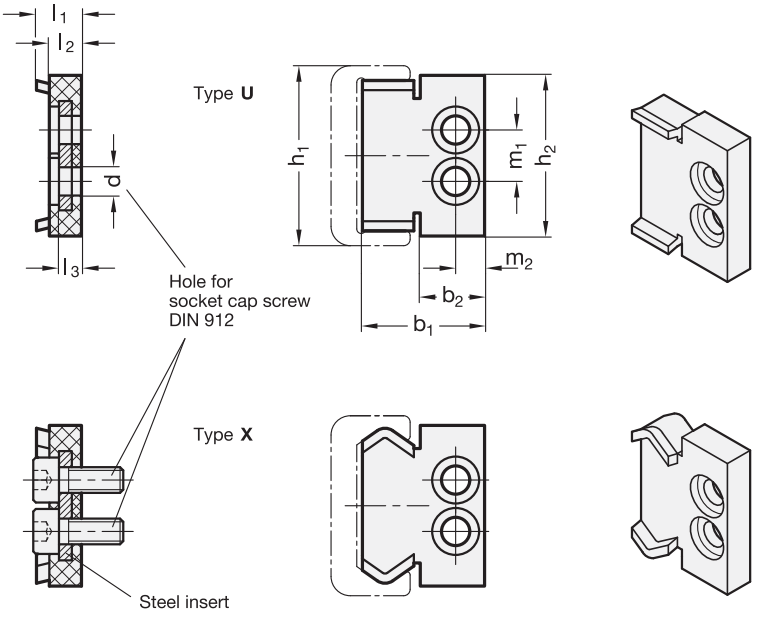

2 Type

U for floating bearing rails
X for fixed bearing rails

1

h_1 Rail	b_1	b_2	d for cylinder head screw DIN 912	h_2	l_1	l_2	l_3 max.	m_1	m_2
18	12,6	5,6	M 3	17	7	5	3,5	-	3,5
28	19	10	M 4	25	7	5	3,5	8	4,5
35	25,5	12,5	M 4	32	7	5	3,5	10	5,5
43	32,2	15	M 4	40	7	5	3,5	12	7,5

Specification

- Wiper
  Plastic PUR, grey
- Bracing core
  Steel, zinc plated
- Cylinder head screw DIN 912
  Steel
  zinc plated, blue passivated
- RoHS compliant

Information

Wipers GN 2428 protect against dirt deposits on rails and rollers.

For size h_1 = 18 the wiper is attached with only one central screw.

Screws are included parts of the order.

see also...

- *Cam roller linear guide rails GN 2422 → Page 103*
- *Linear guide rail systems → Page 100*
- *Load rating of linear guide rail systems → Page 110*

How to order		
GN 2428-35-X (1 2)	1	h_1
	2	Type

Tolerance for mounted linear guide rail systems

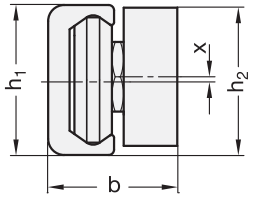

In the combination of rails GN 2422 and cam roller carriages GN 2424, the following dimensions / tolerances exist.

If several cam roller carriages are installed into one rail, an offset x can occur between the cam roller carriages which must be added to the dimension h_2.

h_1	b	h_2	x
18 +0,25/-0,10	+0,15/-0,16	+0,25/-0,25	±0,20
28 +0,25/-0,10	+0,25/-0,10	+0,15/-0,35	±0,20
35 +0,35/-0,10	+0,25/-0,10	+0,10/-0,30	±0,20
43 +0,36/-0,10	+0,25/-0,10	+0,20/-0,35	±0,20

Guidance accuracy

Linear guide rail systems feature the linear guidance accuracy shown in the diagram.

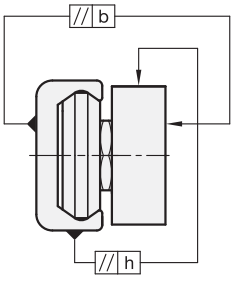

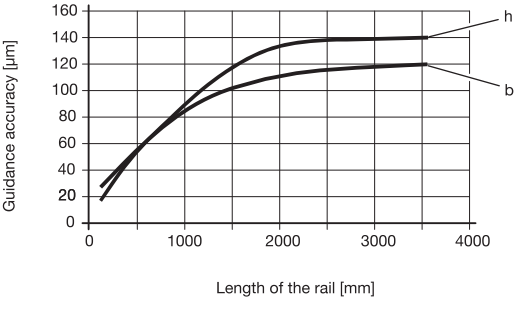

Permissible height offset

The fixed and floating bearing principle ensures that misalignments in the base construction are compensated. However, when using Type UV / UT and XV / XT rails, certain limits should not be exceeded. The following table shows the maximum permissible angle of the height offset of the fixed and floating bearing rails. Please note that the load rating must be reduced by 30% once the specified value is reached.

To calculate h_2, the following equation should be used: $h_2 = a \times \tan w$, with the tabular values shown below used for w.

Example: $h_1 = 43$, a = 650 mm, w max. = 0,171°

h_2 = 650 mm x tan 0,171° = 1,94 mm

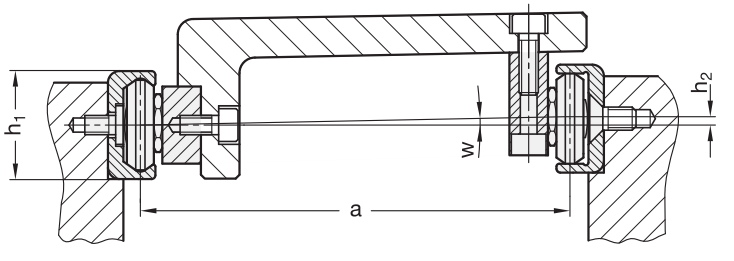

h_1	w max.
18	0,057°
28	0,143°
35	0,151°
43	0,171°

Permissible lateral offset

It is possible to compensate for angular defects and the offset of the mounting surface with the help of fixed and floating bearing rails. The permissible offset of cam rollers and cam roller carriages in the Type UT / UV rails is given by the values for x and z. The reference is the nominal middle of the raceway b_m.

A parallelism or angular error can thus be compensated for across the whole length of the rail, which corresponds to an offset from the sum of the values for x and z.

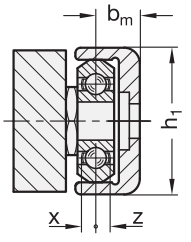

h_1	b_m	x	z
18	6,3	1,1	0,3
28	8,6	1,3	0,7
35	10,5	2,7	1,3
43	14,5	2,5	1,5

Support widths

To guarantee the proper running motion, outside dimensions must be observed during the assembly of linear guide rail systems. Suitable components include supports at the rail and at the roller carriage which should not be smaller than the widths a or b. Also, forces acting from the outside can thus be transferred reliably from the linear guide rail systems without submitting the mounting screw to shear stress.

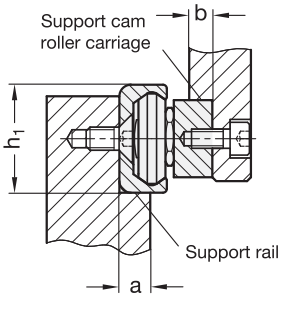

h_1	a	b
18	5	4
28	8	4
35	11	5
43	14	5

Tightening torque

When positioning the rails with countersunk mounting holes, Type UT and XT, make sure the surface is flat and the mating tapped holes are tapped deep enough so the flat head screw is flush with the rail.

The specified tightening torque of the flat head screws must be maintained.

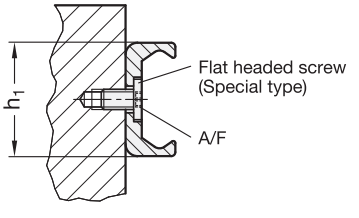

h_1	Screw	A/F Drive	Tightening torque
18	M 4 x 8	T20	3 Nm
28	M 5 x 10	T25	9 Nm
35	M 6 x 12	T30	14 Nm
43	M 8 x 16	T40	24 Nm

Traversal speed

Depending on application and installation length, the maximum traversal speed of cam roller linear guide rail systems is 7 m/s.

Lubrication

Once the cam roller carriage has been placed in the rail, it is recommended to slightly grease the raceway surfaces of the rail with a heavy duty lubricant for linear guide rail systems, such as Klüberplex BE 31-222, using a brush.

Check the lubricant film at regular intervals for any dirt or pollution, e.g. with metal chips.

In the event of visible pollution or clear discoloration of the lubricant, use a clean rag to clean the rails and the rollers and apply new lubricant.

Applying new lubricant is normally necessary once a year or after 100 km of running distance.

Operational temperatures

The components of the roller guide systems are suitable for use in a temperature range of -30 °C to 130 °C.

Load rating

The installation space, the desired mode of attachment and the load to be carried are the determining factors when selecting the best possible roller guide system. The values given below will help in selecting the most suitable cam roller carriage or the most suitable cam rollers.

The details on load capacity are non-binding guide values given without liability and does not constitute any type of guarantee or warranty of intended use. The user must determine in each individual case whether a product is suitable for the intended application. Environmental factors and aging may affect the stated values.

Article No.		Load ratings in main load direction		Permissible load torques		
		$C_{o_{rad}}$ in N	$C_{o_{ax}}$ in N	M_x in Nm	M_y in Nm	M_z in Nm
GN 2424	-18-...	825	260	1,6	8,3	4,8
	-28-...	2210	650	6,4	28	16,4
	-35-...	3550	1070	13,2	63	34,1
	-43-...	5520	1580	23,7	104,7	60,1
GN 2426	-18-...	410	-	-	-	-
	-28-...	1100	-	-	-	-
	-35-...	1760	-	-	-	-
	-43-...	2700	-	-	-	-

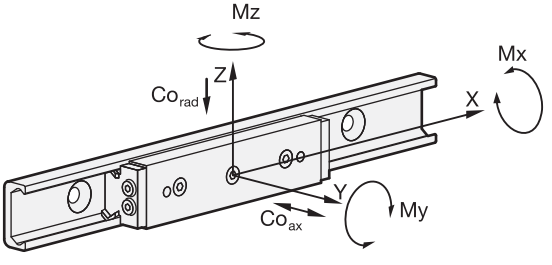

Cam roller carriages

Instructions for installation - Linear guide rail systems

Linear guide rail systems consist of a cam roller linear guide rail GN 2422 and a cam roller carriage GN 2424. All components are packed separately and supplied not assembled. When delivered, the play between cam roller carriage and rail is not preset.

During assembly, set the cam roller carriage as follows:

1. Make sure that the raceways and the cam rollers are clean.

2. Slightly loosen the mounting screw of the central, eccentrically adjustable roller and insert the cam roller carriage (without the wipers supplied) into the rail (see also items 4 and 6).

3. Position the cam roller carriage at one end of the rail. For the floating bearing rails of Type UT and UV, a thin and stable support (e.g. open-end wrench or a feeler gauge) must be placed underneath the ends of the cam roller carriage body and the rail to ensure the parallel alignment of the cam roller carriage in the level raceways.

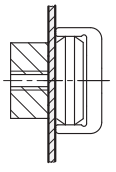

Use support for floating bearing rails!

4. Insert the open-end wrench GN 2424.1 (included) between the eccentric cam roller and the cam roller carriage body. (The centering bores to the left and right mark the position of the running side of the concentric cam rollers / load-bearing cam rollers.)

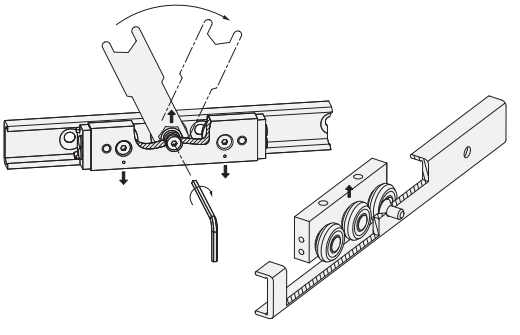

5. Turning the open-end wrench clockwise will press the cam roller to be adjusted against the top raceway which will set the roller carriage free of play. Excessive pre-tensioning must be avoided because this will increase friction and reduce useful service life.

6. While using the open-end wrench to hold the bearing pivot in the correct position, the mounting screw may be moderately tightened. The correct tightening torque will be checked later.

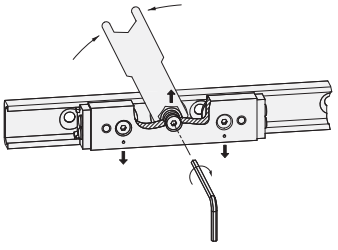

7. Move the cam roller carriage in the rail and make sure that the play / the moderate pre-tensioning is constant along the full length of the rail. The running motion should be free-moving, with the cam roller carriage having any play or jamming at no point inside the rail.

8. Now tighten the mounting screw with the recommended tightening torque shown in the table, with the open-end wrench holding the angular position of the cam rollers in place.

h_1	Tightening torque
18	3 Nm
28	7 Nm
35	7 Nm
43	12 Nm

9. Now mount the wipers, and for cam rollers carriage type N, the longitudinal seal. To do so, remove the cam roller carriage from the rail.

10. Before reinserting the cam roller carriage, make sure that the raceways / rollers are properly lubricated using a heavy duty lubricant for linear guidance.

Type **A**

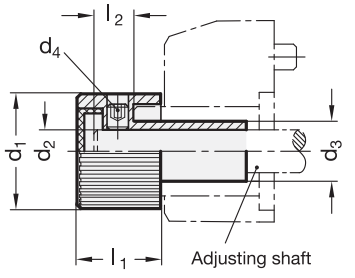

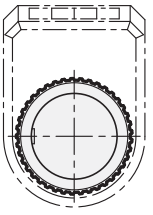

Type **B**

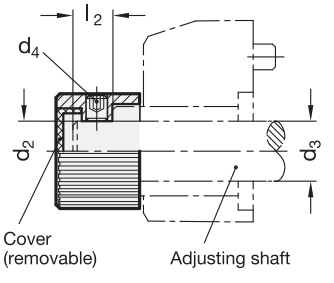

3 Type

A Shaft-Ø d_2 < Bore-Ø d_3
B Shaft-Ø d_2 = Bore-Ø d_3

1 d_1	2 d_2 H8 Bore B of the control knob = Shaft-Ø						d_3 Bore-Ø of the position indicator	d_4 Socket set screw with internal hexagon	l_1	l_2 Length of the protruding shaft		for position indicator
	Type A					Type B				min.	max.	
22	B 6	B 8	-	-	-	B 10	10	M 4	15,5	4,5	9,6	GN 955
27	B 6	B 8	B 10	B 12	-	B 14	14	M 5	19,5	6	11,3	GN 954 / GN 9054
42	B 10	B 12	B 14	B 15	B 16	B 20	20	M 6	24	6,5	15	GN 953 / GN 9053

Specification

- Aluminium
  anodized, black
- Stainless Steel-Socket set screw DIN 916
  with internal hexagon and serrated point
- Hub cover cap
  Plastic, light grey
- *ISO-Fundamental Tolerances → Page 323*
- RoHS compliant

Information

Control knobs GN 957 are used in connection with position indicators. These control knobs offer a simple solution when the assembly requires manual fine adjustment for the application for which it has been designed.

The design of this knob adapts it to the diameter of the adjustment shaft, so that no adapter bushings GN 952.1 are needed.

see also...

- *Position indicators GN 954 → Main Catalogue Page 390*
- *Position indicators GN 953 → Main Catalogue Page 388*

How to order		
1 2 3	1	d_1
GN 957-27-B8-A	2	d_2
	3	Type

GN 817
Steel / Stainless Steel

Indexing plungers
with and without rest position

Range extended!

Inox Stainless Steel

Inch sizes available

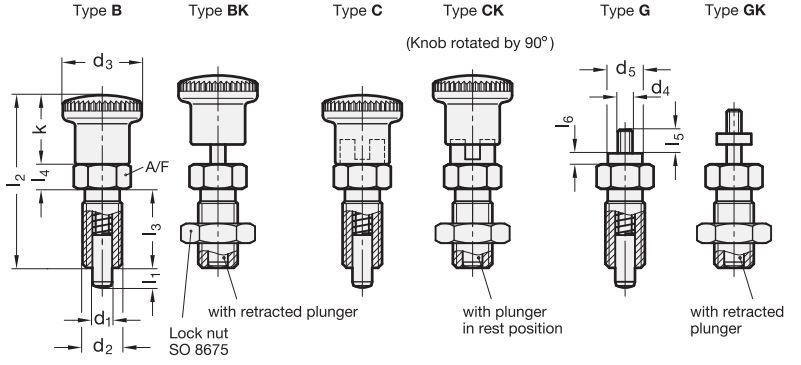

3 Type

- **B** without rest position, without lock nut
- **BK** without rest position, with lock nut
- **C** with rest position, without lock nut
- **CK** with rest position, with lock nut
- **G** with threaded rod, without lock nut
- **GK** with threaded rod, with lock nut

1 d_1 Plunger $^{-0,02}_{-0,04}$ Bore H7	2 l_1 min.	d_2	d_3	d_4	d_5	k	l_2	l_3	l_4	l_5	l_6	A/F	Spring load in N ≈ initial	end
4	4	M 8 x 1	16	M 3	7	14	35	16	5	4,5	2,5	10	4,5	12
4	6	M 8 x 1	16	M 3	7	14	35	16	5	4,5	2,5	10	4	12,5
5	5	M 10 x 1	19	M 4	8	16	40	18	6	5,5	3	12	5	15
5	8	M 10 x 1	19	M 4	8	16	40	18	6	5,5	3	12	5	18
6	6	M 12 x 1,5	23	M 5	9	20	48	22	6	7	3,5	14	6,5	19
6	9	M 12 x 1,5	23	M 5	9	20	48	22	6	7	3,5	14	6	25
8	8	M 16 x 1,5	28	M 6	10	24	58	26	8	8,5	4	17	8,5	26
8	12	M 16 x 1,5	28	M 6	10	24	58	26	8	8,5	4	17	8,5	28
10	12	M 16 x 1,5	28	M 6	10	24	58	26	8	8,5	4	17	9,5	38
12	15	M 20 x 1,5	33	M 6	12	28,5	71,5	33	10	8,5	4	22	11,5	40
16	20	M 24 x 2	33	M 8	15	28,5	78,5	38	12	11,5	5	27	13	54

Specification

4

- Steel
  - blackened
  - Plunger hardened
- Stainless Steel AISI 303 **NI**
  Plunger chemically nickel plated
- Knob Plastic (Polyamide PA)
  - black, matt
  - red **RT** RAL 3000
    add RT on order code
  - not removable
- *ISO-Fundamental Tolerances → Page 323*
- *Stainless Steel characteristics → Page 334*
- *Plastic characteristics → Page 331*
- RoHS compliant

Information

Indexing plungers GN 817 with rest position (Type C / CK) are used for such applications where the plunger has to stay in its retracted position. To achieve this, the knob is rotated by 90° degrees after being retracted. A notch keeps the plunger in this position.

see also...

- *Range of indexing plungers → Main Catalogue Page 402 / 411*

Indexing plungers 1 2 3 GN 817-4-6-C		
	1	d_1
	2	l_1
	3	Type

Stainless Steel-Indexing plungers 1 2 3 4 GN 817-6-9-B-NI		
	1	d_1
	2	l_1
	3	Type
	4	Material

Indexing plungers

with and without rest position

Range extended!

Type **A** | Type **B** | Type **BK** | Type **C** | Type **CK** (Knob rotated by 90°)

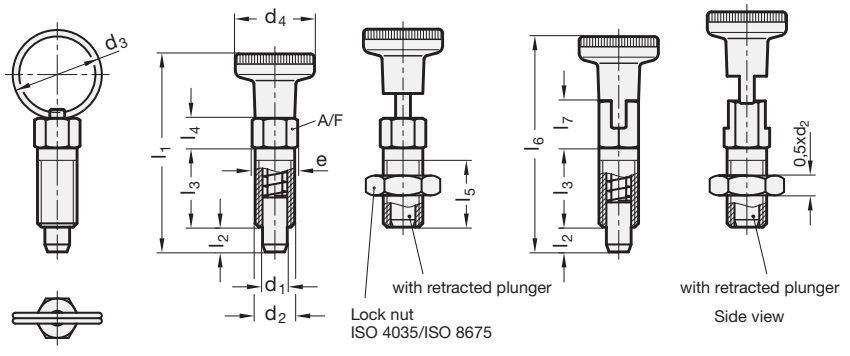

3 Type

- **A** without rest position (lifting ring) without lock nut
- **AK** without rest position (lifting ring) with lock nut
- **B** without rest position (Knob), without lock nut
- **BK** without rest position (Knob), with lock nut
- **C** with rest position (Knob), without lock nut
- **CK** with rest position (Knob), with lock nut

Rostfrei – Inox Stainless Steel

Inch – Inch sizes available

1 d_1 Pin h11 Bore $^{+0,03}_{+0,08}$	2 d_2	d_3	d_4	e	l_1	l_2 min.	l_3	l_4	l_5 min.	l_6	l_7	A/F	max. tightening torque in Nm	Spring load in N ≈ initial	end
3	M 6	14	12	6,9	30	3,5	12	4,5	10	32,5	7	6	2	3	12
3	M 6 x 0,75	14	12	6,9	30	3,5	12	4,5	10	32,5	7	6	3	3	12
4	M 6	14	12	6,9	30,5	4	12	4,5	10	33	7	6	2	3	12
4	M 8 x 1	18	16	9,2	39,5	4,5	16	6	13,5	43	9,5	8	8	5	24
5	M 8	18	16	9,2	40	5	16	6	13,5	43,5	9,5	8	7	5	24
5	M 8 x 1	18	16	9,2	40	5	16	6	13,5	43,5	9,5	8	7	5	24
5	M 10 x 1	18	18	11,5	42,5	5	16	6	13,5	46	10	10	22	5	24
6	M 10	24	18	11,5	49	6	20	7,5	17	52	10,5	10	15	5	21
6	M 12 x 1,5	24	21	13,8	52	6	20	7,5	16,5	55	11	12	38	5	21
8	M 12	30	21	13,8	59	8	24	9	20,5	63,5	13,5	12	20	6	22
8	M 12 x 1,5	30	21	13,8	59	8	24	9	20,5	63,5	13,5	12	20	6	22
8	M 16 x 1,5	30	25	19,6	63,5	8	24	9	20,5	68	13,5	17	80	6	22
10	M 16 x 1,5	30	25	19,6	67,5	10	26	9	22,5	72,5	14	17	80	4	27

Specification

4

- Threaded body
  - Steel zinc plated, blue passivated **ST**
  - Stainless Steel AISI 303 **NI**
- Plunger
  Stainless Steel AISI 303
- Spring
  Stainless Steel AISI 301
- Lifting ring
  Stainless Steel AISI 301
- Knob Plastic (Polyamide PA)
  - black, matt
  - not removable
- *ISO-Fundamental Tolerances → Page 323*
- *Stainless Steel characteristics → Page 334*
- RoHS compliant

Information

Indexing plungers GN 717 are a reasonably priced indexing plunger variant which are distinguished for their small dimensions. Their use should be limited to such applications where high precision indexing is not required.

Due to the comparably small dimensions of indexing plungers GN 717, it is adviseable to follow the values listed above regarding maximum tightening torque during assembly.

- *Range of indexing plungers → Main Catalogue Page 402 / 411*
- *Distance bushings GN 609 / GN 609.5 (to limit the thread length) → Main Catalogue Page 450*

How to order

1 2 3 4

GN 717-8-M12-A-ST

1	d_1
2	d_2
3	Type
4	Material

Indexing plungers

removable, with or without rest position

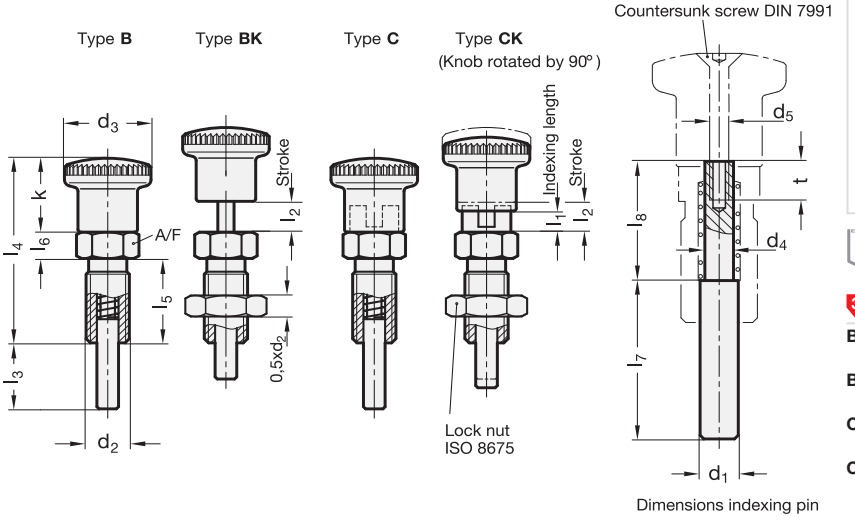

Inox
Stainless
Steel

3 Type

B without rest position, without locknut
BK without rest position, with locknut
C with rest position, without lock nut
CK with rest position, with lock nut

1 d_1 Pin $^{-0,02}_{-0,04}$ Bore H7	l_1	2 l_2 max. stroke	d_2	d_3	d_4	d_5	k	l_3	l_4	l_5	l_6	l_7	l_8	t	A/F	Spring load in N ≈ inital	end
7	6	8	M 12 x 1,5	23	5	M 3	20	20	48	22	6	31	17,6	7	14	6,5	19
7	9	11	M 12 x 1,5	23	5	M 3	20	20	48	22	6	27,5	21,1	7	14	6	25
8	8	10	M 16 x 1,5	28	6	M 4	24	25	58	26	8	39	20,6	8	17	8,5	26
8	12	14	M 16 x 1,5	28	6	M 4	24	25	58	26	8	34	25,6	8	17	8,5	28
10	12	14	M 16 x 1,5	28	7,5	M 4	24	30	58	26	8	39,2	25,4	8	17	9,5	38
12	15	17	M 20 x 1,5	33	9	M 6	28,5	35	71,5	33	10	47,3	31,3	13,5	22	11,5	40

Specification

4

- Steel, blackened **ST**
  - Threaded body
  - Lock nut
- Stainless Steel **NI**
  - Threaded body, AISI 303
  - Lock nut, AISI 304
- Pin
  Stainless Steel AISI 303
- Countersunk screw DIN 7991
  Stainless Steel AISI 304
- Knob
  - Plastic (Polyamide PA)
  - black, matt
- *ISO-Fundamental tolerances → Page 323*
- *Stainless Steel characteristics → Page 334*
- *Plastic characteristics → Page 331*
- RoHS compliant

Information

Indexing plungers GN 817.8 have been designed such that special versions of the indexing pins can also be made economically in smaller unit quantities.

If required, the indexing pins can be machined or made by the user as shown in the drawing above. They are assembled with a countersunk screw and can therefore be assembled several times. All parts are supplied in a non-assembled set.

The indexing plungers type C / CK are used for such applications where the plunger has to stay in its retracted position. To achieve this, the knob is rotated by 90° degrees after being retracted. A notch keeps the plunger in this position.

How to order

1 2 3 4

GN 817.8-8-12-B-NI

1	d_1
2	l_1
3	Type
4	Material

Type **B**

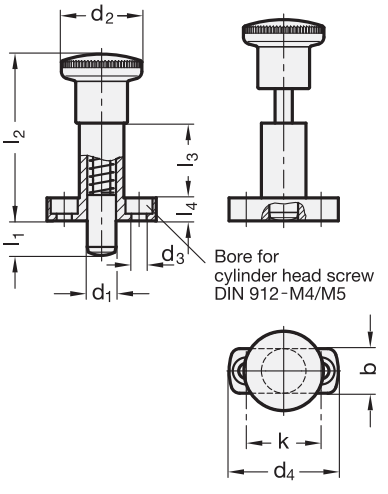

Type **C**

(Knob rotated by 90°)

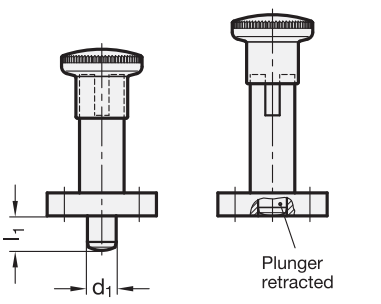

3 Type

B without rest position
C with rest position

1 d_1 Pin $^{-0,02}_{-0,04}$ Bore $^{+0,10}_{+0,03}$	2 l_1	b	d_2	d_3	d_4	k	l_2	l_3	l_4	Spring load in N≈ initial	end
6	6	13	23	4,3	34	22	48	22	6	6,5	19
6	9	13	23	4,3	34	22	48	22	6	6	25
8	8	16	28	5,3	38	26	58	26	8	8,5	26
8	12	16	28	5,3	38	26	58	26	8	8,5	28
10	12	16	28	5,3	38	26	58	26	8	9,5	38

Specification

- Guide
  Zinc die casting
  plasic coated
  black, matt, textured finish
- Pin
  Stainless Steel
  - AISI 303
  - chemically nickel plated
- Knob Plastic
  Technopolymer (Polyamide PA)
  - black, matt
  - red **RT** RAL 3000
    add RT on order code
  - not removable
- *Plastic characteristics* → *Page 331*
- *Stainless Steel characteristics* → *Page 334*
- RoHS compliant

On request

- Indexing plungers with T-Handle

Information

Indexing plungers GN 817.1 (Type C) are used for such applications where the plunger has to stay in its retracted position. To achieve this, the knob is rotated by 90° degrees after being retracted. A notch keeps the plunger in this position.

see also...

- *Positioning bushings GN 412.2* → *Main Catalogue Page 454*
- *Positioning bushings with ramping cone GN 412.3* → *Main Catalogue Page 455*
- *Indexing plungers GN 608* → *Main Catalogue Page 432*
- *Indexing plungers GN 608.1* → *Main Catalogue Page 433*
- *Mini indexing plungers GN 822.8* → *Page 436*

How to order

1 2 3

GN 817.1-8-12-B

1	d_1
2	l_1
3	**Type**

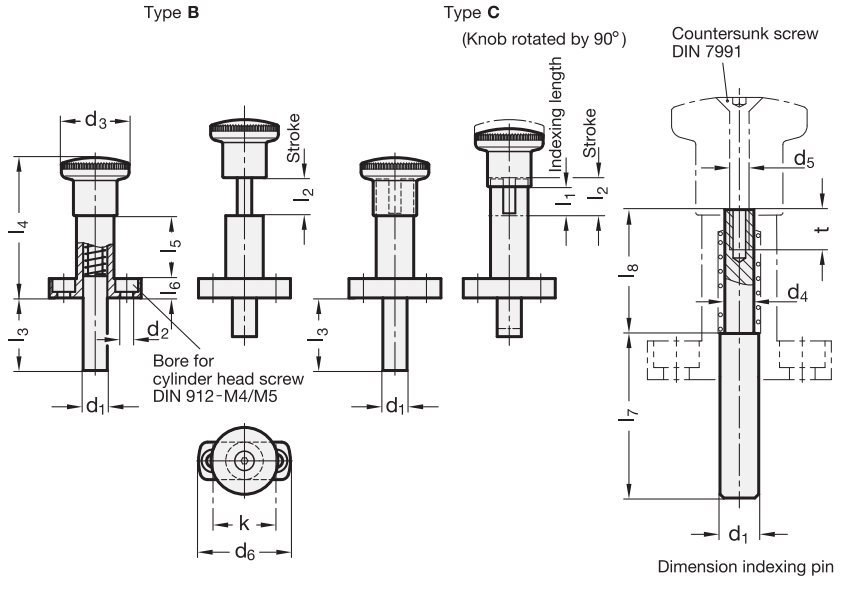

3 Type

B without rest position
C with rest position

1 d_1 Pin $^{-0,02}_{-0,04}$ Bore $^{+0,10}_{+0,03}$	2 l_1	l_2 max. stroke	b	d_2	d_3	d_4	d_5	d_6	k	l_3	l_4	l_5	l_6	l_7	l_8	t	Spring load in N ≈ initial	end
7	6	8	13	4,3	23	5	M 3	34	22	20	48	22	6	31	17,6	7	6,5	19
7	9	11	13	4,3	23	5	M 3	34	22	20	48	22	6	27,5	21,1	7	6	25
8	8	10	16	5,3	28	6	M 4	38	26	25	58	26	8	39	20,6	8	8,5	26
8	12	14	16	5,3	28	6	M 4	38	26	25	58	26	8	34	25,6	8	8,5	28
10	12	14	16	5,3	28	7,5	M 4	38	26	30	58	26	8	39,2	25,4	8	9,5	38

Specification

- Guide
  Zinc die casting
  plastic coated
  black, textured finish
- Pin
  Stainless Steel
  - AISI 303
  - chemically nickel plated
- Countersunk screw DIN 7991
  Stainless Steel AISI 304
- Knob Plastic
  Technopolymer (Polyamide PA)
  - black, matt
  - not removable
- *Stainless Steel characteristics → Page 334*
- *Plastic characteristics → Page 331*
- RoHS compliant

Information

Indexing plungers GN 817.9 have been designed such that special versions of the indexing pins can also be made economically in smaller unit quantities.

If reqired, the indexing pins can be machined or made by the user as shown in the drawing above. They are assembled with a countersunk screw and can therefore be assembled several times. All parts are supplied in a non-assembled set.

The indexing plungers type C are used for such applications where the plunger has to stay in its retracted position. To achieve this, the knob is rotated by 90° degrees after being retracted. A notch keeps the plunger in this position.

see also...

- *Positioning bushings GN 412.2 → Main Catalogue Page 454*
- *Positioning bushings with ramping cone GN 412.3 → Main Catalogue Page 455*

How to order
1 2 3
GN 817.9-8-8-C

1	d_1
2	l_1
3	Type

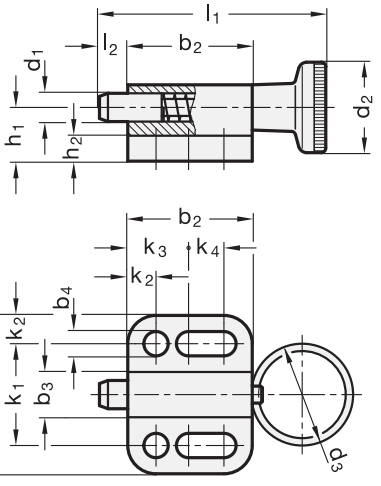

Range extended!

Plunger retracted

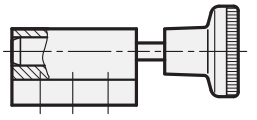

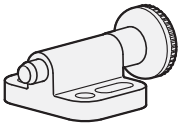

2 Type

A without rest position (lifting ring)

B without rest position (Knob)

1

d_1 Plunger h11 Bore $^{+0,03}_{+0,08}$	d_2	d_3	b_1	b_2	b_3	b_4 −0,2	h_1	h_2	k_1 ±0,05	k_2	k_3	k_4	l_1	l_2 ±0,5	Spring load in N ≈ initial	end
4	12	14	22	16,5	6	3,3	7	4	14	4	8	4,5	30,5	4	3	12
5	16	18	28	22	8	4,3	9,5	4,5	18	5	10	7	40	5	5	24
6	18	24	32	27,5	10	5,4	10,5	5	21	5,5	12	10	49	6	5	21
8	21	30	34	33	12	5,4	12,5	6	23	5,5	12	15,5	59	8	6	22
10	25	30	39	35	14,5	6,5	14,5	6	27	6	15	13,5	67,5	10	4	25

Specification

- Guide
  Zinc die casting
  plastic coated
  black, textured finish
- Plunger
  Stainless Steel AISI 303
- Spring
  Stainless Steel AISI 301
- Lifting ring
  Stainless Steel AISI 301
- Knob
  Plastic (Polyamide PA)
  - black, matt
  - not removable
- *ISO-Fundamental Tolerances → Page 323*
- *Stainless Steel characteristics → Page 334*
- *Plastic characteristics → Page 331*
- RoHS compliant

Information

The screwing range of indexing plungers GN 417 is chosen in such a way that washers ISO 7092 can be used.

see also...

- *Range of indexing plungers → Main Catalogue Page 402 / 411*
- *Positioning bushings GN 412.2 → Main Catalogue Page 454*
- *Locators GN 417.1 → Page 120*
- *Assembly sets for profile systems 30 / 40 GN 965 → Page 147*
- *Assembly sets for profile systems 30 / 40 / 45 GN 968 → Page 155*

How to order 1 2 GN 417-6-B		
	1	d_1
	2	Type

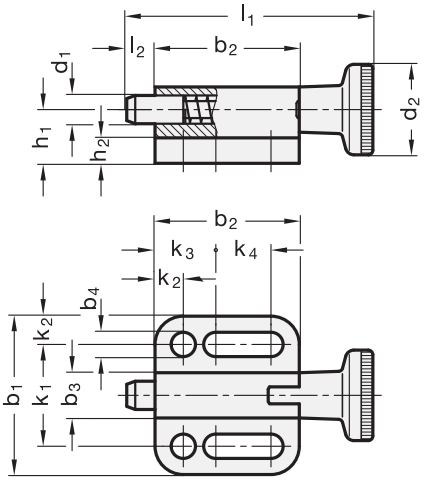

Range extended!

Plunger in rest position

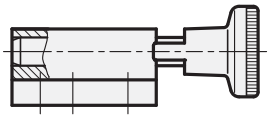

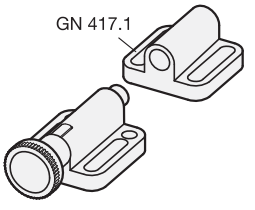

2 Type

C with rest position (Knob)

1

d_1 Plunger h11 Bore $^{+0,03}_{+0,08}$	d_2	b_1	b_2	b_3	b_4 −0,2	h_1	h_2	k_1 ±0,05	k_2	k_3	k_4	l_1	l_2 min.	Spring load in N ≈ initial	Spring load in N ≈ end
4	12	22	19	6	3,3	7	4	14	4	8	7	33	4	3	12
5	16	28	25,5	8	4,3	9,5	4,5	18	5	10	10,5	43,5	5	5	24
6	18	32	30,5	10	5,4	10,5	5	21	5,5	12	13	52	6	5	21
8	21	34	37,5	12	5,4	12,5	6	23	5,5	12	20	63,5	8	6	22
10	25	39	40	14,5	6,5	14,5	6	27	6	15	18,5	72,5	10	4	25

Specification

- Guide
  Zinc die casting
  plastic coated
  black, textured finish
- Plunger
  Stainless Steel AISI 303
- Spring
  Stainless Steel AISI 301
- Knob
  Plastic Technopolymer (Polyamide PA)
  - black, matt
  - not removable
- *ISO-Fundamental Tolerances → Page 323*
- *Stainless Steel characteristics → Page 334*
- *Plastic characteristics → Page 331*
- RoHS compliant

Information

Indexing plungers GN 417 type C with rest position are used for such applications where the plunger has to stay in its retracted position. To achieve this, the knob is rotated by 90° degrees after being retracted. A notch keeps the plunger in this position.

The screwing range is chosen in such a way that washers ISO 7092 can be used.

see also...

- *Range of indexing plungers → Main Catalogue Page 402 / 411*
- *Positioning bushings GN 412.2 → Main Catalogue Page 454*
- *Locators GN 417.1 → Page 120*
- *Assembly sets for profile systems 30 / 40 GN 965 → Page 147*
- *Assembly sets for profile systems 30 / 40 / 45 GN 968 → Page 155*

How to order		
GN 417-8-C (1 2)	1	d_1
	2	Type

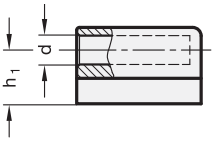

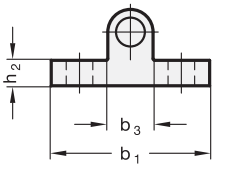

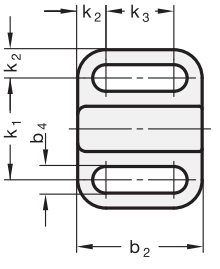

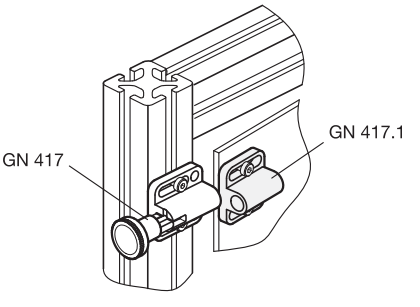

[1]

d		b_1	b_2	b_3	b_4	h_1	h_2	k_1	k_2	k_3
Nominal dimension	Actual dimension +0,1									
4	4,1	22	16,5	6	3,3	7	4	14	4	8,5
5	5,1	28	22	8	4,3	9,5	4,5	18	5	12
6	6,2	32	27,5	10	5,4	10,5	5	21	5,5	16,5
8	8,2	34	33	12	5,4	12,5	6	23	5,5	22
10	10,2	39	35	14,5	6,8	14,5	6	27	6	23

Specification

- Steel
  plastic coated
  black, textured finish
- RoHS compliant

Information

Locators GN 417.1 are matched to the indexing plungers GN 417 and are used to position the indexing pin.

see also...
- *Indexing plungers GN 417 (without rest position)* → *Page 118*
- *Indexing plungers GN 417 (with rest position)* → *Page 119*
- *Assembly sets for profile systems 30 / 40 GN 965* → *Page 147*
- *Assembly sets for profile systems 30 / 40 / 45 GN 968* → *Page 155*

How to order		
GN 417.1-6 [1]	1	d

Indexing plungers

with and without rest positions

Type **A**

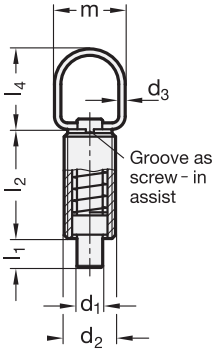

Type **AK**

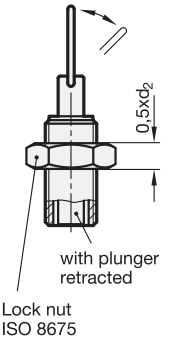

Type **C**

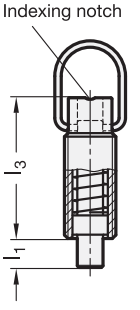

Type **CK**

(Lifting ring rotated by 90°)

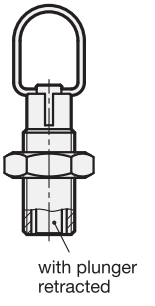

Inox Stainless Steel

3 Type

A without rest position, without lock nut
AK without rest position, with lock nut
C with rest position, without lock nut
CK with rest position, with lock nut

1 d_1 Pin $^{-0,05}_{-0,10}$ Bore H7	2 d_2		d_3	l_1 min.	l_2	l_3	l_4	m	Spring load in N initial	Spring load in N end
5	M 10	M 10 x 1	1,5	5	22	28	23	18	5	15
6	M 12	M 12 x 1,5	2	6	24	31	25	22	6	21
8	M 16	M 16 x 1,5	2	9	34	44	25	22	7	27
10	M 16	M 16 x 1,5	2	9	34	44	25	22	7	27

Specification

4

- Guide (Threaded socket) Steel blackened **ST**
- Guide (Threaded socket) Stainless Steel AISI 303 **NI**
- Plunger Stainless Steel AISI 303 chemically nickel plated
- Spring Stainless Steel AISI 301
- Lifting ring Stainless Steel AISI 301
- *ISO-Fundamental tolerances* → *Page 323*
- *Stainless Steel characteristics* → *Page 334*
- RoHS compliant

Information

Owing to its shape, the lifting ring of the indexing plungers GN 413 can be used both as a screw-in assist during assembly or as indexing lock (Type C / Type CK).

Indexing plungers with rest position are used when the indexing pin is temporarily not allowed to protrude. After the pin is pulled in, turn the pull ring by 90°. The ring is held in position by an indexing notch.

Steel-Indexing plunger

1 2 3 4
GN 413-8-M16-CK-ST

1	d_1
2	d_2
3	Type
4	Material

Stainless Steel-Indexing plunger

1 2 3 4
GN 413-6-M12x1,5-A-NI

1	d_1
2	d_2
3	Type
4	Material

GN 822.7 Stainless Steel-Mini indexing plungers

with and without rest position

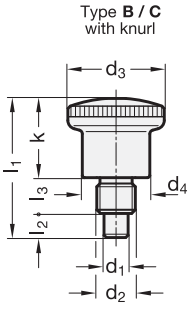

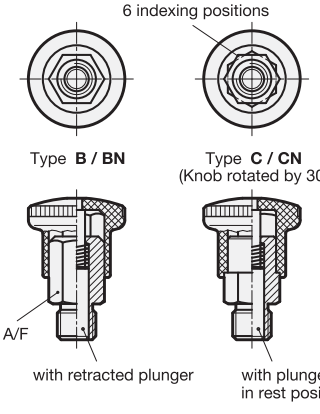

Range extended!

Mounting information

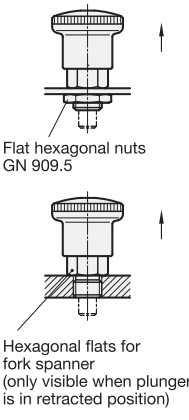

Rostfrei Inox Stainless Steel

Inch sizes available

3 Type

B without rest position with plastic knob

BN without rest position with Stainless Steel-Knob

C with rest position with plastic knob

CN with rest position with Stainless Steel-Knob

1 d_1 Plunger h9 Bore $^{+0.03}_{+0.08}$	2 d_2		d_3	d_4	l_1	l_2 min.	l_3	k	A/F	Spring load in N ≈ initial	end
4	M 8	M 8 x 1	21	15	27,5	5	6	16,5	10	4	12
5	M 10	M 10 x 1	25	18	34	6	8	20	12	6	16
6	M 10	M 10 x 1	25	18	34	6	8	20	12	6	16
6	M 12	M 12 x 1,5	28	20	40,5	7	10	23,5	14	10	23
7	M 12	M 12 x 1,5	28	20	40,5	7	10	23,5	14	10	23
8	M 16	M 16 x 1,5	33	23	47,5	10	12	25,5	17	11	35
10	M 16	M 16 x 1,5	33	23	47,5	10	12	25,5	17	11	35

Specification

- Socket / Plunger
  Stainless Steel AISI 303
- Spring
  Stainless Steel AISI 301
- Knob Type B and C
  Plastic (Polyamide PA)
  - black, matt
  - not removable
- Knob Type BN / CN
  - Stainless Steel AISI 305
  - matt blasted
  - not removable
- *Stainless Steel characteristics → Page 334*
- *Plastic characteristics → Page 334*
- *ISO-Fundamental tolerances → Page 323*
- RoHS compliant

Accessory

- Distance bushings GN 609.5 or flat hexagonal nuts GN 909.5 are to be ordered separately.

Information

Stainless Steel-Mini indexing plungers GN 822.7 are distinguished for their small dimensions.

Based on the principle of the GN 822 mini indexing plungers, this model combines their clever type of construction with a complete series of all current sizes of bolts and threads. They provide a reasonably priced alternative to the GN 607 / GN 607.1 indexing plungers of the appropriate sizes. To mount, first turn the mini indexing plunger in with the knurled button. Pulling the indexing pin will release the hexagon nut which can then be tightened with an open-end spanner.

The spanner flats on the lock nut are revealed when retracting the pin, so that the mini indexing plunger can be easily tightened by means of a fork spanner.

In types C and CN, the button can be turned by 30° after retracting the indexing pin, holding it in the “retraced” position using the indexing lock.

see also...

- *Range of indexing plungers → Main Catalogue Page 402 / 411*

How to order

GN 822.7 - 6 (1) - M12x1,5 (2) - CN (3)

1	d_1
2	d_2
3	Type

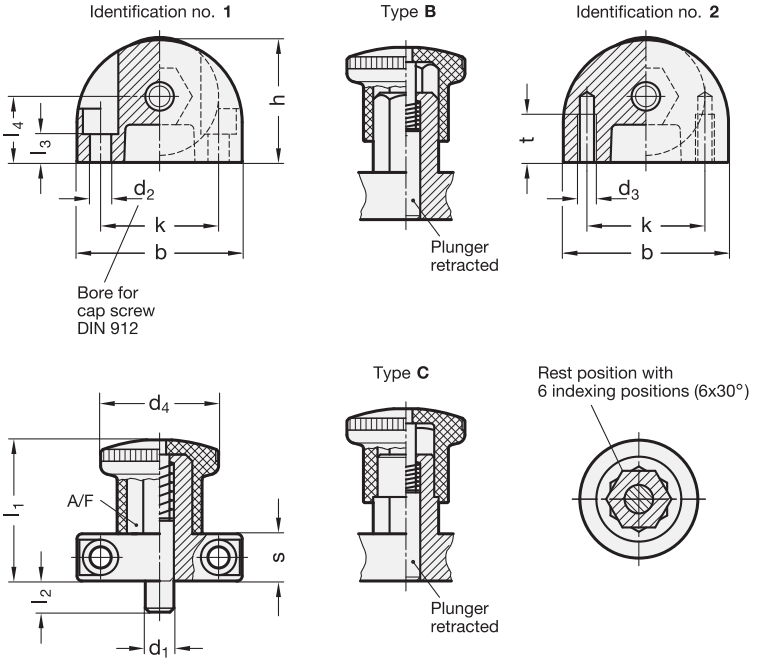

3 Type
B without rest position
C with rest position

4 Identification no.
1 Mounting from the front
2 Mounting from the back

1 d_1 Pin $^{0}_{-0,06}$ Bore $^{+0,05}_{+0,1}$	2 b	d_2	d_3	d_4	h	k	l_1	l_2 min.	l_3	l_4	s	t	Spring load in N ≈ initial	end
5	35	4,3	M 4	25	26	25	32	6	6	14	12	10	5	15
6	35	4,3	M 4	25	26	25	32	6	6	14	12	10	5	15
8	47	5,3	M 5	33	34	35	39	10	10	18	14	12	9	35
10	47	5,3	M 5	33	34	35	39	10	10	18	14	12	9	35

Specification

- Guide
  Zinc die casting
  plastic coated
  black, textured finish
- Plunger
  Stainless Steel AISI 303
- Spring
  Stainless Steel AISI 301
- Knob
  Plastic (Polyamide PA)
  - black, matt finish
  - not removable
- *Plastic characteristics → Page 331*
- *Stainless Steel characteristics → Page 334*
- RoHS compliant

Information

The outstanding feature of the indexing plungers GN 412 is their compact design. They are mounted either from the front with cylinder head screws or from the back through threads. In Type C, the knob can be turned by 30° after retracting the indexing pin, holding it in the „retracted“ position by means of the indexing lock.

The dimensions and connection measurements match the combination with GN 412.1 mounting blocks in connection with positioning bushings GN 412.2 or GN 412.3.

see also...

- *Mounting blocks GN 412.1 → Main Catalogue Page 452*
- *Positioning bushings GN 412.2 → Main Catalogue Page 454*
- *Positioning bushings with ramping cone GN 412.3 → Main Catalogue Page 455*
- *Assembly sets for profile systems 30 / 40 GN 965 → Page 146*
- *Assembly sets for profile systems 30 / 40 / 45 GN 968 → Page 154*

How to order

1 2 3 4
GN 412-6-35-B-1

1	d_1
2	b
3	Type
4	Identification no.

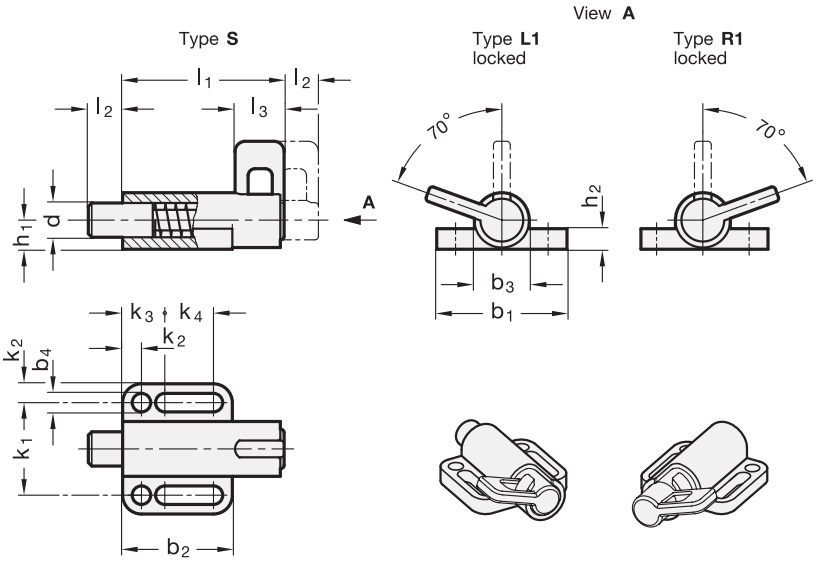

3 Type

S without locking without rest position

L1 Locking / Rest position via counterclockwise rotation

R1 Locking / Rest position via clockwise rotation

1 d Plunger -0,05 Bore +0,1 +0,05	2 b_1	b_2	b_3	b_4	h_1	h_2	k_1	k_2	k_3	k_4	l_1	l_2 min.	l_3	Spring load in N ≈ initial	Spring load in N ≈ end
6	38	32	16	5,4	8,5	6	27	5,5	12	14,5	47	10	14	21	27
8	38	32	16	5,4	8,5	6	27	5,5	12	14,5	47	10	14	21	27
8	46	40	20	6,4	11	6	33	6,5	14,5	19	59	12	17	25	38
10	38	32	16	5,4	8,5	6	27	5,5	12	14,5	47	10	14	21	27
10	46	40	20	6,4	11	6	33	6,5	14,5	19	59	12	17	25	38
12	46	40	20	6,4	11	6	33	6,5	14,5	19	59	12	17	25	38

Specification

- Housing
  Zinc die casting
  plastic coated, RAL 9005, textured finish
- Plunger
  Steel
  zinc plated, blue passivated
- Spring
  Stainless Steel AISI 301
- Latch lever
  Plastic, Technopolymer (Polyamide PA)
  - black, matte
  - not removable
- *ISO-Fundamental Tolerances → Page 323*
- *Stainless Steel characteristics → Page 334*
- *Plastic characteristics → Page 331*
- RoHS compliant

Information

The plunger of spring latches GN 416 is operated by an axial pulling of the latch lever. This kind of operation from the top side is advantageous in certain installation situations.

The pins of Type S spring latches are engaged in the housing to prevent rotation, and therefore lock in the starting position but not the retracted position. Types R1 and L1 spring latches offer a locking function in the starting as well as in the retracted position, preventing an unintentional operation. A lock notch holds the latch lever in both positions.

The adjustment range is designed in such a way that ISO 7092 washers can be used within the adjustment slot in the housing.

see also...

- *Positioning bushings GN 412.2 → Main catalogue Page 454*
- *Indexing plungers GN 417 → Main catalogue Page 120 / 121*
- *Assembly sets for profile systems 30 / 40 GN 965 → Page 146*
- *Assembly sets for profile systems 30 / 40 / 45 GN 968 → Page 154*

How to order

1 2 3

GN 416-8-46-L1

1	d
2	b_1
3	Type

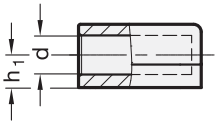

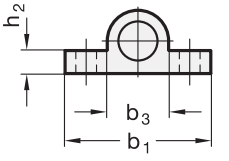

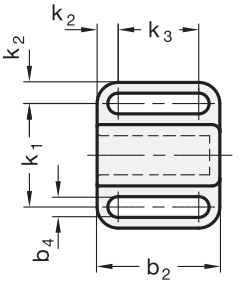

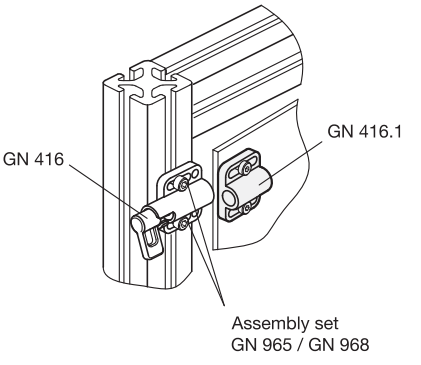

1 d		2 b_1	b_2	b_3	b_4	h_1	h_2	k_1	k_2	k_3
Nominal dimension	Actual dimension $^{+0,15}_{-0,05}$									
6	6,2	38	28	16	5,4	8,5	6	27	5,5	17
8	8,2	38	28	16	5,4	8,5	6	27	5,5	17
8	8,2	46	38	20	6,4	11	6	33	6,5	25
10	10,2	38	28	16	5,4	8,5	6	27	5,5	17
10	10,2	46	38	20	6,4	11	6	33	6,5	25
12	12,2	46	38	20	6,4	11	6	33	6,5	25

Specification

- Zinc die casting
  plastic coated
  black, RAL 2005, textured finish
- RoHS compliant

Information

Locators GN 416.1 are matched to the spring latches GN 416 and are used to position the indexing pin.

see also...

- *Assembly sets for profile systems 30 / 40 GN 965* → *Page 146*
- *Assembly sets for profile systems 30 / 40 / 45 GN 968* → *Page 154*

How to order		
GN 416.1-8-46	1	d
	2	b_1

Range extended!

Type **A/AR**
Plunger protruded

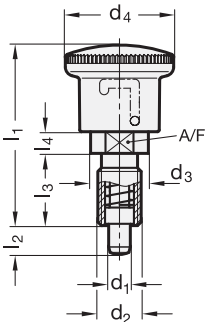

Type **AK/ARK**
Plunger retracted and locked

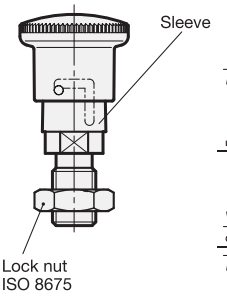

Type **B**
Plunger protruded

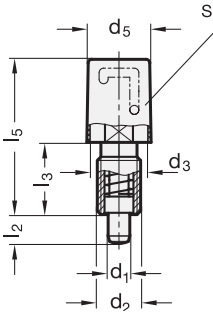

Plunger retracted and locked

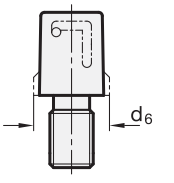

3	Type
A	with knob, sleeve black, without lock nut
AK	with knob, sleeve black, with lock nut
AR	with knob, sleeve red, without lock nut
ARK	with knob, sleeve red, with lock nut
B	with key, sleeve black, without lock nut
BK	with key, sleeve black, with lock nut

1 d_1 Plunger $^{0}_{-0,05}$ Bore $^{+0,15}_{+0,07}$	2 d_2	d_3	d_4	d_5	d_6	$l_1 \approx$	l_2	l_3	$l_4 \approx$	l_5	A/F	Spring load in N ≈ initial	Spring load in N ≈ end
6	M 12 x 1,5	16	28	17	-	50	8	20	6	43	14	13	28
8	M 16 x 1,5	18	28	17	20	52	10	22	6	48	16	14	38

Specification

- Threaded body
  Steel zinc plated, blue passivated
- Plunger
  Stainless Steel AISI 303
- Spring
  Stainless Steel AISI 301
- Knob
  Plastic (Polyamide PA)
  - black, matt
  - not removable
- Sleeve
  Plastic (Polyamide PA)
  - black, matt or red
  - not removable
- *Stainless Steel characteristics → Page 334*
- *Plastic characteristics → Page 334*
- RoHS compliant

Accessory

- Keys GN 816-10
  (Locking plungers Ø 6 and Ø 8 have the same keys)

Information

If not operated, the plunger of the locking plungers GN 816 protrudes. To retract, move against the spring force and hold in the end position by turning by 90°.

The shape of the cam curve secures the plunger against accidental operation.

When operating the button (Type AR / ARK), the visible **red** covering sleeve indicates the locking status: Indexing pin does **not** protrude.

For the execution with operation with key (Type B / BK) a key is required to move the plunger. In this execution, a cover sleeve provides additional security and safety from unauthorized removal of the locking plunger. The cover sleeve also provides additional protection against malfunction caused by dirt.

see also...

- *Range of indexing plungers → Main Catalogue Page 402 / 411*
- *Distance bushings GN 609 (to limit the thread length) → Main Catalogue Page 450*
- *Mounting blocks GN 412.1 → Main Catalogue Page 452*
- *Positioning bushings GN 412.2 → Main Catalogue Page 454*
- *Flat hexagonal nuts GN 909 / GN 909.5 → Main Catalogue Page 451*

Locking plungers
1 2 3
GN 816-8-M16x1,5-A

1	d_1
2	d_2
3	Type

Version with key (Type B / Type BK)

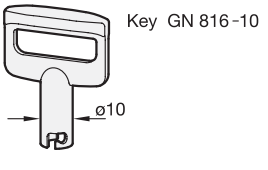

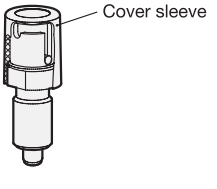

Assembly instruction

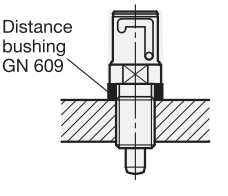

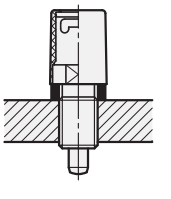

Range extended!

Type **A/AR**
Plunger retracted

Type **AK/ARK**
Plunger protruded and locked

Type **B**
Plunger retracted

Plunger protruded and locked

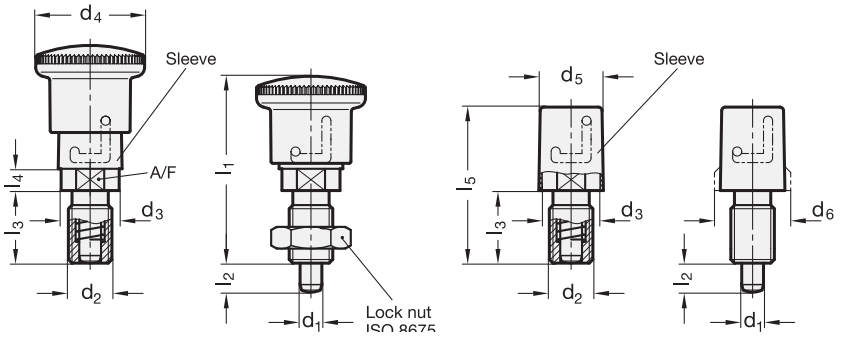

3	Type
A	with knob, sleeve black, without lock nut
AK	with knob, sleeve black, with lock nut
AR	with knob, sleeve red, without lock nut
ARK	with knob, sleeve red, with lock nut
B	with key, sleeve black, without lock nut
BK	with key, sleeve black, with lock nut

1 d_1 Plunger $^{0}_{-0,05}$ Bore $^{+0,15}_{+0,07}$	2 d_2	d_3	d_4	d_5	d_6	$l_1 \approx$	l_2	l_3	$l_4 \approx$	l_5	A/F	Spring load in N ≈ initial	Spring load in N ≈ end
6	M 12 x 1,5	16	28	17	-	51,5	8	20	6	43	14	12	27
8	M 16 x 1,5	18	28	17	20	54,5	10	22	6	48	16	12	35

Specification

- Threaded body
  Steel zinc plated, blue passivated
- Plunger
  Stainless Steel AISI 303
- Spring
  Stainless Steel AISI 301
- Knob
  Plastic (Polyamide PA)
  - black, matt
  - not removable
- Sleeve
  Plastic (Polyamide PA)
  - black, matt or red
  - not removable
- *Stainless Steel characteristics → Page 334*
- *Plastic characteristics → Page 331*
- RoHS compliant

Accessory

- Keys GN 816.1-10
  (Locking plungers Ø 6 and Ø 8 have the same keys)

Information

If not operated, the plunger of the locking plungers GN 816.1 is retracted. To move out, move against the spring force and hold in the end position by turning by 90°.

The shape of the cam curve secures the plunger against accidental operation.

When operating the button (Type AR / ARK), the visible **red** covering sleeve indicates the locking status: Indexing pin does **not** protrude.

For the execution with operation with key (Type B / BK) a key is required to move the plunger. In this execution, a cover sleeve provides additional security and safety from unauthorized removal of the locking plunger. The cover sleeve also provides additional protection against malfunction caused by dirt.

see also...
- *Range of indexing plungers → Main Catalogue Page 402/411*
- *Distance bushings GN 609 (to limit the thread length) → Main Catalogue Page 450*
- *Mounting blocks GN 412.1 → Main Catalogue Page 452*
- *Positioning bushings GN 412.2 → Main Catalogue Page 454*
- *Flat hexagonal nuts GN 909 / GN 909.5 → Main Catalogue Page 451*

Locking plungers
1 2 3
GN 816.1-6-M12x1,5-B

1	d_1
2	d_2
3	Type

Version with key (Type B / Type BK)

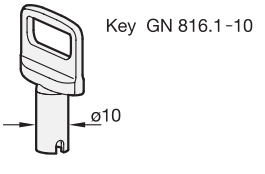

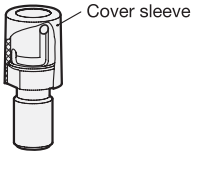

Assembly instruction

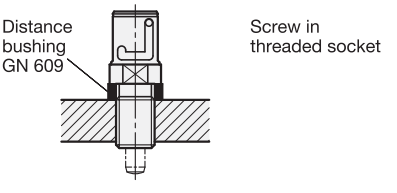

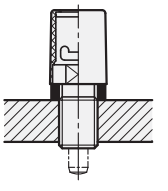

GN 612.3
Steel / Stainless Steel

Cam action indexing plungers
for welding

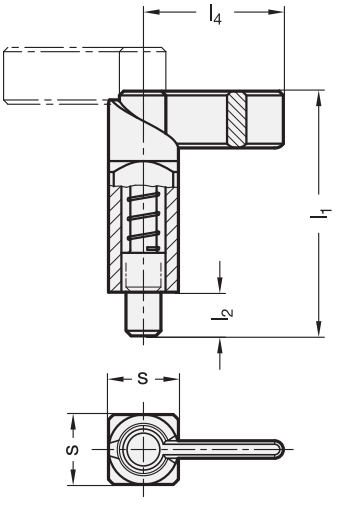

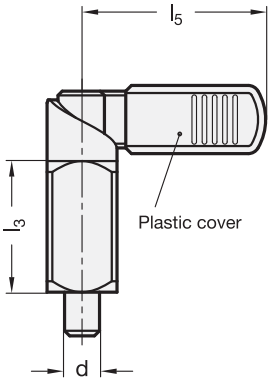

Range extended!

Inox Stainless Steel

3 Type

A without plastic cover
B with plastic cover

1 d Plunger $^{-0,02}_{-0,04}$ Bore $^{+0,14}_{+0,1}$	2 s	l_1	l_2	l_3	l_4	l_5	Spring load in N ≈ initial	end
6	16	56	10	30	32	42	12	32
8	16	56	10	30	32	42	12	32
8	20	69	12	38	37	52	21	58
10	16	56	10	30	32	42	12	32
10	20	69	12	38	37	52	21	58
12	20	69	12	38	37	52	21	58

Specification

4

- Steel —
  - Guide blackened, weldable
  - Plunger nitrided
- Stainless Steel NI
  - Guide, weldable AISI 304
  - Plunger AISI 303
- Spring
  Stainless Steel AISI 301
- Plastic cover (Polyamide PA)
  black, matt
- *ISO-Fundamental Tolerances → Page 323*
- RoHS compliant

Information

Cam action indexing plungers GN 612.3 are used in cases where the locking pin must not protrude all the time. By rotating the lock through 180° the locking pin withdraws itself. A notch keeps the plunger in this position.

The square body can therefore be welded in any required position. In order to prevent a change in the spring load by the transferred heat we recommend spot welding the plunger body.

see also...

- *Range of cam action indexing plungers*
  → Main Catalogue Page 412 / 415
- *Positioning bushings GN 412.2 → Main Catalogue Page 454*

Cam action indexing plunger with Steel plunger

1 2 3

GN 612.3-10-16-A

1	d
2	s
3	Type

Stainless Steel-Cam action indexing plunger

1 2 3 4

GN 612.3-8-20-B-NI

1	d
2	s
3	Type
4	Material

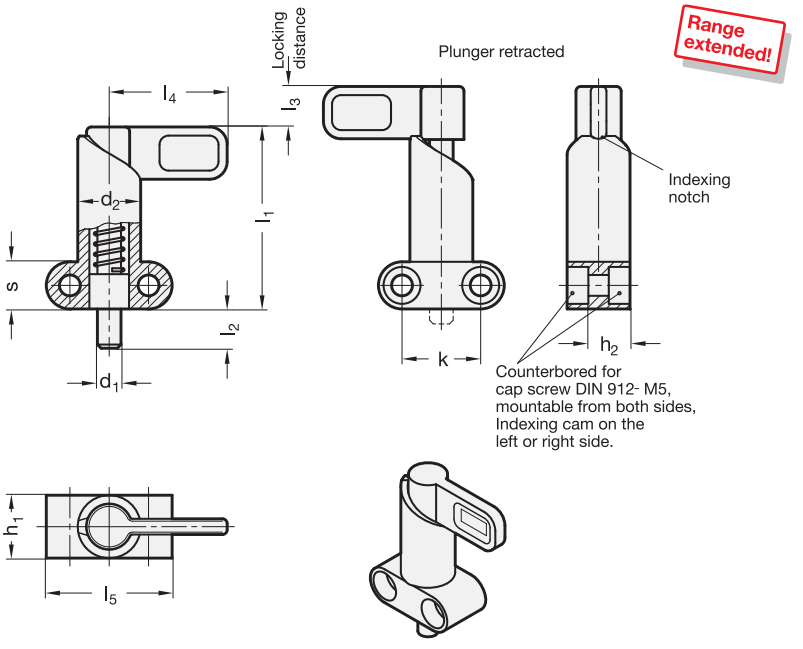

1 d_1 Plunger -0,05 Bore +0,1 +0,05	2 l_2		3 d_2	h_1	h_2	k	l_1 ≈	l_3	l_4	s	Spring load in N ≈ initial	end
6	10	16	16	16	10,5	20	46	30	32	12	12	32
8	10	16	16	16	10,5	20	46	30	32	12	12	32
8	12	18	20	20	14,5	22	57	37	37	15	21	58
10	10	16	16	16	10,5	20	46	30	32	12	12	32
10	12	18	20	20	14,5	22	57	37	37	15	21	58
12	12	18	20	20	14,5	22	57	37	37	15	21	58

Specification

4

- Guide
  Zinc die casting
  plastic coated
  black, RAL 9005, textured finish ● SW
- Plunger
  Steel
  zinc plated, blue passivated
- Lever
  Plastic (Polyamide PA)
  - black, matt
  - not removable
- *Plastic characteristics → Page 331*
- RoHS compliant

Information

Cam action indexing plungers GN 612.9 are used in cases where the plunger must not protrude all the time. By rotating the lever through 180° the plunger withdraws itself. The notch allows safe positioning.

see also...

- *Range of cam action indexing plungers → Main Catalogue Page 412 / 415*
- *Positioning bushings GN 412.2 → Main Catalogue Page 454*
- *Assembly sets for profile systems GN 965 → Page 148*
- *Assembly sets for profile systems GN 968 → Page 156*

How to order

1 2 3 4
GN 612.9-8-10-16-SW

1	d_1
2	l_2
3	d_2
4	Finish

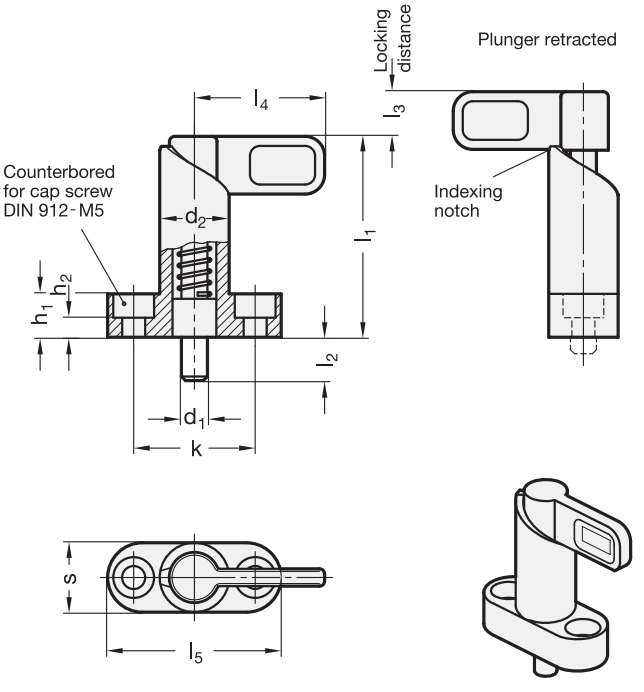

1 d_1 Plunger -0,05 Bore $^{+0,1}_{+0,05}$	2 l_2		3 d_2	h_1	h_2	k	l_1	l_3	l_4	l_5	s	Spring load in N ≈ initial	end
6	10	16	16	10	4,5	28	46	10	30	40	16	12	32
8	10	16	16	10	4,5	28	46	10	30	40	16	12	32
8	12	18	20	10	4,5	32	57	12	37	45	20	21	58
10	10	16	16	10	4,5	28	46	10	30	40	16	12	32
10	12	18	20	10	4,5	32	57	12	37	45	20	21	58
12	12	18	20	10	4,5	32	57	12	37	45	20	21	58

Specification

4

- Guide
  Zinc die casting
  plastic coated
  black, RAL 9005, textured finish ● SW
- Plunger
  Steel
  zinc plated, blue passivated
- Lever
  Plastic (Polyamide PA)
  - black, matt
  - not removable
- *Plastic characteristics → Page 331*
- RoHS compliant

Information

Cam action indexing plungers GN 612.10 are used in cases where the plunger must not protrude all the time. By rotating the lever through 180° the plunger withdraws itself. The notch allows safe positioning.

see also...

- *Range of cam action indexing plungers*
  → Main catalogue page 412 / 415
- *Spring latches GN 722.2 (Steel) → Main catalogue Page 462*
- *Spring latches GN 722.3 (Steel) → Main catalogue Page 463*
- *Cam action indexing plungers GN 612.2 (Steel)*
  → Main catalogue page 457
- *Guide bushings DIN 172 / DIN 179 → Page 140*

How to order

1 2 3 4
GN 612.10-8-10-16-SW

1	d_1
2	l_2
3	d_2
4	Oberfläche

GN 214.3
Plastic slide

GN 214.6
Stainless Steel-Slide

Stainless Steel-Locking pins
with axial lock (Pawl)

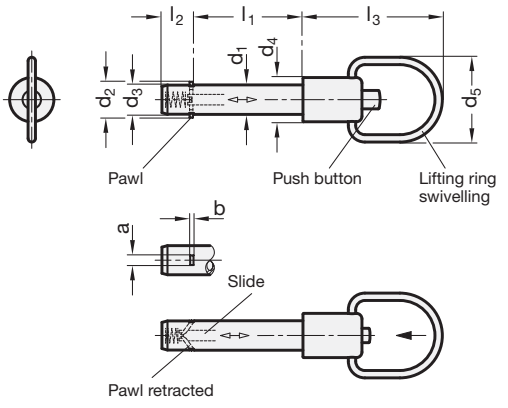

Example of application

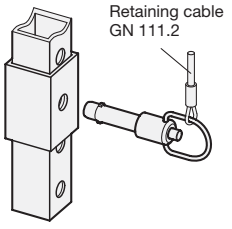

Inox Stainless Steel

1 d_1 -0,1	2 l_1 +0,4 Minimum size										a	b	d_2	d_3	d_4	d_5	l_2	l_3	Load in kN ≈ (Double sided shear force) see information
6	10*	12*	16	20	25	30	35	40	45	50	2,3	0,5	7,5 +0,5	5,9	12	23	7	38	17
8	16	20	25	30	35	40	45	50	-	-	2,8	1	10 +0,5	7,9	12	23	8,4	38	35
10	20	25	30	35	40	45	50	60	-	-	3,3	1	12 +1	9,9	16	28	9,8	42	47
12	25	30	35	40	45	50	60	70	80	-	3,8	1	14 +1	11,9	16	28	11,3	42	75
16	30	35	40	45	50	60	70	80	-	-	4,8	1,2	19 +1	15,9	20	32	14,2	46,5	138

* only GN 214.3

Specification

- **GN 214.3**
  - Plunger
    Stainless Steel AISI 303
  - Slide / Push button
    Plastic
    temperature resistant up to 80 °C
    red
- **GN 214.6**
  - Plunger
    Stainless Steel AISI 303
  - Slide / Push button
    Stainless Steel AISI 303

This information applies to both standards:

- Pawl
  Stainless Steel sheet metal AISI 304
- Lifting ring
  Stainless Steel AISI 301
- Spring
  Stainless Steel AISI 301
- *Stainless Steel characteristics → Page 334*
- RoHS compliant

Accessory

- Ball chains GN 111 / GN 111.5
  → *Main Catalogue Page 477*
- Retaining cables GN 111.2
  → *Main Catalogue Page 478*
- Spiral retaining cables GN 111.4
  → *Main Catalogue Page 479*

Information

Stainless Steel-Locking pins with axial lock GN 214.3/ GN 214.6 are used for quick fixing, connecting and locking of various jig and fixture systems. A typical application is location pins which have to be often removed and re-placed again.

The two locking pawls can be retracted by pressing the button and on releasing it the pawls will be locked again.

The rectangular shape of the locking pawls in stainless steel creates an enlarged contact area responsible for the axial securement of the locking pin.

The version with swivelling lifting ring is ideal for the use in confined spaces.

The load values given in the above table at shear stress are theoretically obtained and indicative only. They are non-binding recommended values and rule our any liability. They constitute no general warranty of quality and condition. The user must determine from case to case whether a product is suitable for the intended use.

see also...

- *Range of locking pins → Main Catalogue Page 466 / 468*

Stainless Steel-Locking pin 1 2 GN 214.3-16-70	1	d_1
	2	l_1

Stainless Steel-Locking pin 1 2 GN 214.6-10-60	1	d_1
	2	l_1

GN 111.6 Stainless Steel-Retaining rings

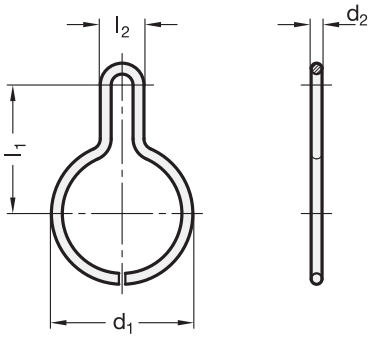

Cut-in for the retaining ring

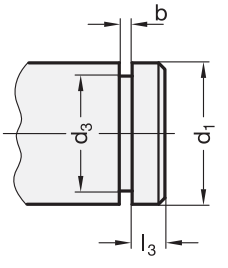

Inox
Stainless
Steel

The retaining rings are to be mounted in radial direction as shown in the drawing

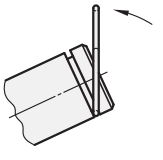

1

d_1	d_2	d_3 −0,1	b +0,2	l_1	l_2	l_3 +0,3
12	1,4	9,1	1,7	16	5,6	2,5
14	1,5	10,9	1,8	17	6	3,2
15	1,5	11,9	1,8	17	6	3,2
16	1,5	12,9	1,8	17	6	3,2
17	1,6	13,7	1,9	19	6,4	3,9
18	1,6	14,7	1,9	19	6,4	3,9
19	1,6	15,7	1,9	19	6,4	3,9
20	1,6	16,7	1,9	19	6,4	3,9
21	1,7	17,5	2	20	6,8	5,1
22	1,7	15,7	2	20	6,8	5,1
23	1,7	19,5	2	20	6,8	5,1
24	1,7	20,5	2	20	6,8	5,1
26	1,8	22,3	2,1	21	7,2	5,4

Specification

- Stainless Steel AISI 301
- *Stainless Steel characteristics → Page 334*
- RoHS compliant

Information

Retaining rings GN 111.6 are normally used together with ball chains or retaining cables.

One typical application involves making star knobs captive, for instance. Star knobs with mounted retaining ring and different retaining cables are available under GN 6336.13.

Ball chains and retaining cables to be ordered separately.

see also...

- *Retaining cables GN 111.2 → Main catalogue Page 478*
- *Stainless Steel-Ball chains GN 111.5 → Main catalogue Page 477*
- *Ball chains GN 111 (Steel) → Main catalogue Page 477*
- *Spiral retaining cables GN 111.4 → Main catalogue Page 479*

How to order		
1 GN 111.6-12	1	d_1

GN 614.5 Spring plungers

press on type, with ball

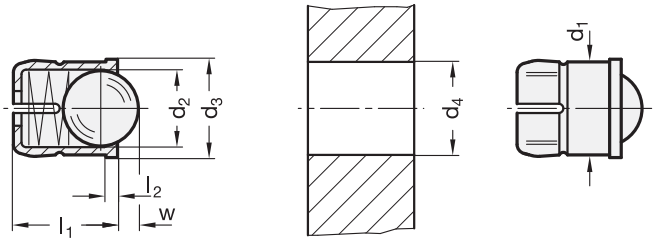

Inox Stainless Steel

[1]

d_1 +0,1	d_2	d_3	d_4 +0,2	l_1 ±0,2	l_2	w	Spring load in N ≈ initial	end
4	3	4,6	4	5	1	0,8	3	6,5
5	4	5,6	5	6	1	1	6	9,4
6	5	6,5	6	7	1	1,6	6,2	12,6
8	6,5	8,5	8	9	1	1,9	10	20,4
10	8	11	10	13,5	1,5	2,4	11,9	22,3

Specification

[2]

- Housing
  Plastic (Polyacetal POM) **KU**
  temperature resistant up to 50 °C
  Ball
  Stainless Steel
  - AISI 420C
  - hardened
- Housing and ball
  Plastic (Polyacetal POM) **KD**
  temperature resistant up to 50 °C
- Spring
  Stainless Steel AISI 631
- *Plastic characteristics → Page 331*
- *Stainless Steel characteristics → Page 334*
- RoHS compliant

Information

Spring plungers GN 614.5 are used as detents as well as for push-on and push-off applications and ejectors.

The geometric shape of the plastic housing generates a self-clamping function which compensates drill hole tolerances of as much as 0,2 mm. It also allows the hand-tightened assembly and makes overhead installation easier.

see also...

- *Spring plungers GN 614 → Main Catalogue Page 490*

How to order		
GN 614.5-8-KD [1] [2]	1	d_1
	2	Material

GN 1524
Steel / Stainless Steel

Swing bolts
with long threaded bolt

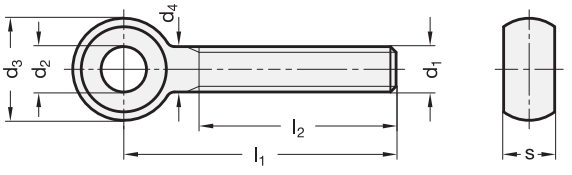

Range extended!

Cylinder head shoulder bolt GN 732 used as bearing pin

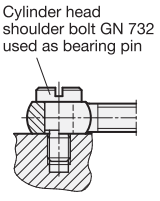

Rost frei Inox Stainless Steel

1 d_1	2 l_1				l_2	d_2 E8	d_3 −0,4	s −0,2	d_4
M 6	50	60	70	80	40	6	12	8	6
M 8	50	-	-	-	40	8	16	10	8
M 8	60	70	80	100	45	8	16	10	8
M 10	50	-	-	-	38	10	20	12	10
M 10	60	-	-	-	46	10	20	12	10
M 10	70	80	100	120	50	10	20	12	10
M 12	50	-	-	-	35	12	25	14	12
M 12	60	-	-	-	42	12	25	14	12
M 12	70	-	-	-	52	12	25	14	12
M 12	80	100	120	130	60	12	25	14	12
M 16	70	-	-	-	49	16	32	18	16
M 16	80	-	-	-	59	16	32	18	16
M 16	100	-	-	-	77	16	32	18	16
M 16	120	140	160	-	80	16	32	18	16
M 20	100	-	-	-	75	20	40	22	20
M 20	120	-	-	-	95	20	40	22	20
M 20	140	160	-	-	100	20	40	22	20
M 24*	160	240	-	-	120	25	50	28	24

* This size is not available in Stainless Steel (NI).

Specification

3

- Steel —
  - Tensile strength class 5.8 (500 N/mm²)
  - turned
  - blackened
- Stainless Steel AISI 303 **NI**
  - turned
  - matt shot-blasted
- *ISO-Fundamental Tolerances → Page 323*
- *Stainless Steel characteristics → Page 334*
- RoHS compliant

Information

Swing bolts GN 1524 offer a longer threaded bolt contrary to DIN 444.

For stocking purposes cylinder head shoulder bolts GN 732 can be used for the sizes M8, M10 and M12.

see also...

- *Cylinder head shoulder bolts GN 732 → Main Catalogue Page 529*

Steel-Swing bolts		
GN 1524-M12-100	1	d_1
	2	l_1

Stainless Steel-Swing bolts		
GN 1524-M20-160-NI	1	d_1
	2	l_1
	3	Material

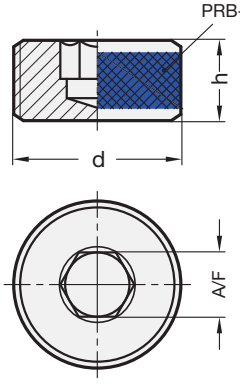

Example for application

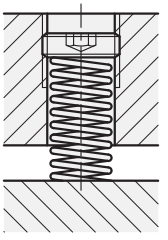

Range extended!

Inox Stainless Steel

2 Type

A without thread coating
PRB with thread coating (polyamide allround coating)

1

d GN 252	d GN 252.5	h	A/F
M 12 x 1,5	M 12 x 1,5	10	6
M 16 x 1,5	M 16 x 1,5	10	8
M 20 x 1,5	M 20 x 1,5	12	10
M 24 x 1,5	M 24 x 1,5	12	14
M 27 x 1,5	M 27 x 1,5	12	14
M 30 x 1,5	-	12	17
M 33 x 1,5	-	12	17

Specification

- **GN 252**
  Steel
  - Tensile strength class 5.8 (500 N/mm²)
  - blackened
- **GN 252.5**
  Stainless Steel AISI 303
- *Stainless Steel characteristics → Page 334*
- RoHS compliant

Information

The thread locking PRB (polyamide allround coating) is a clamping lock which prevents the locking screw from being inadvertently being loosened and becoming detached.

see also...

- *Threaded plugs GN 749 (with sealing ring rubber)*
  → Main Catalogue Page 920
- *Threaded plugs DIN 906 (with conical thread)*
  → Main Catalogue Page 921

Blanking plug, Steel GN 252-M24x1,5-A (1, 2)	1	d
	2	Type

Stainless Steel-Blanking plug GN 252.5-M16x1,5-PRB (1, 2)	1	d
	2	Type

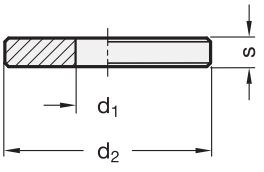

Rost frei Inox Stainless Steel

2 d_1 $^{+0,1}_{+0,3}$	3 d_2 −0,2	4 s ±0,1		
4	8	1	2	-
4	12	1	2	3
5	10	1	2	3
5	15	2	3	-
6	12	1	2	3
6	20	2	3	5
8	16	2	3	5
8	25	2	3	5
10	20	2	3	5
10	30	3	5	-
12	20	2	3	5
12	30	3	5	-
16	20	2	3	5
16	30	3	5	-

Specification

1

- Stainless Steel **NI**
  - AISI 304
  - turned, blank
- *Stainless Steel characteristics → Page 334*
- RoHS compliant

On request

- other dimensions
- chemically blackened surface

Information

Washers / Levelling disks GN 6343 are used mainly in mechanical engineering and jigmaking if shimming is required for levelling.

see also...

- *Stainless Steel-Washers GN 6341 → Main Catalogue Page 538*
- *Stainless Steel-Countersunk washers GN 184.5 → Main Catalogue Page 542*
- *Washers DIN 6340 → Main Catalogue Page 539*

How to order

1 2 3 4

GN 6343-NI-8-25-2

1	**Material**
2	**d_1**
3	**d_2**
4	**s**

GN 6342

Steel / Stainless Steel

Washers with axial friction bearing

Inox Stainless Steel

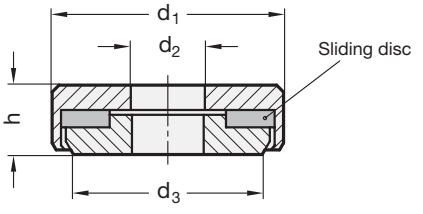

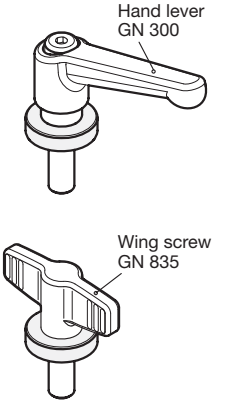

2 d_1	3 d_2 $^{+0,2}_{+0,4}$	d_3	h	for screws with thread	Static load in kN
20	6	16	6	M 6	20
26	8	22	7	M 8	38
28	10	24	8	M 10	40
32	12	28	9	M 12	55

Specification

1

- Steel blackened — ST
- Stainless Steel AISI 303 — NI
- Sliding disk
  - Plastic (Polyamide 46)
  - glasfibre reinforced
  - temperature resistant up to 120 °C
  - slightly greased (PTFE-mounting grease)
- *Stainless Steel characteristics → Page 334*
- RoHS compliant

Information

Used in connection with clamping screws, e.g. star knob screws, washers with axial friction bearing GN 6342 offer the following advantages:

- almost **double** the clamping force owing to lower area friction
- fixed contact surface acting gently on the element to be clamped

How to order		
1 2 3 GN 6342-ST-28-10	1	**Material**
	2	d_1
	3	d_2

Range extended!

DIN 172 (with collar)

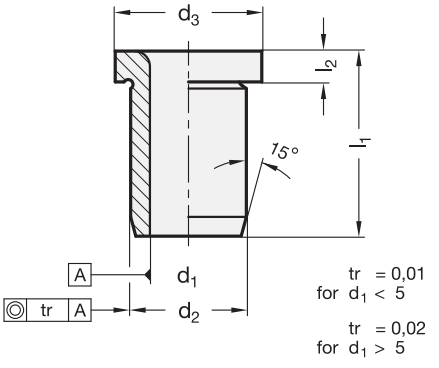

DIN 179 (without collar)

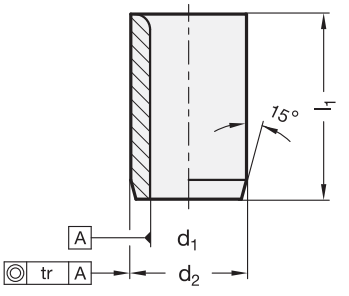

3 Type

A bore one-sided

1 d1 F7 Bore	2 l1			d2 n6	d3	l2
B 2	6	9	-	5	8	2
B 2,1	6	9	-	5	8	2
B 2,5 (M 3)	6	9	-	5	8	2
B 3	8	12	16	6	9	2,5
B 3,1	8	12	16	6	9	2,5
B 3,3 (M 4)	8	12	16	6	9	2,5
B 3,5	8	12	16	7	10	2,5
B 3,8	8	12	16	7	10	2,5
B 4	8	12	16	7	10	2,5
B 4,1	8	12	16	8	11	2,5
B 4,2 (M 5)	8	12	16	8	11	2,5
B 4,5	8	12	16	8	11	2,5
B 4,8	8	12	16	8	11	2,5
B 5 (M 6)	8	12	16	8	11	2,5
B 5,1	10	16	20	10	13	3
B 5,5	10	16	20	10	13	3
B 5,8	10	16	20	10	13	3
B 6	10	16	20	10	13	3
B 6,1	10	16	20	12	15	3
B 6,5	10	16	20	12	15	3
B 6,8 (M 8)	10	16	20	12	15	3
B 7	10	16	20	12	15	3
B 7,5	10	16	20	12	15	3
B 7,8	10	16	20	12	15	3
B 8	10	16	20	12	15	3
B 8,1	12	20	25	15	18	3
B 8,5 (M 10)	12	20	25	15	18	3
B 9	12	20	25	15	18	3
B 9,5	12	20	25	15	18	3
B 9,8	12	20	25	15	18	3

1 d1 F7 Bore	2 l1			d2 n6	d3	l2
B 10	12	20	25	15	18	3
B 10,1	12	20	25	18	22	4
B 10,2 (M 12)	12	20	25	18	22	4
B 10,5	12	20	25	18	22	4
B 11	12	20	25	18	22	4
B 11,5	12	20	25	18	22	4
B 11,8	12	20	25	18	22	4
B 12	12	20	25	18	22	4
B 12,1	16	28	36	22	26	4
B 12,5	16	28	36	22	26	4
B 13 (M 14)	16	28	36	22	26	4
B 13,5	16	28	36	22	26	4
B 14 (M 16)	16	28	36	22	26	4
B 14,1	16	28	36	22	26	4
B 14,5	16	28	36	22	26	4
B 15	16	28	36	22	26	4
B 15,5	16	28	36	26	30	4
B 16	16	28	36	26	30	4
B 16,1	16	28	36	26	30	4
B 16,5	16	28	36	26	30	4
B 17	16	28	36	26	30	4
B 18	16	28	36	26	30	4
B 19	20	36	45	30	34	5
B 20	20	36	45	30	34	5
B 22	20	36	45	30	34	5
B 24	20	36	45	35	39	5
B 25	20	36	45	35	39	5
B 26	20	36	45	35	39	5
B 28	25	45	56	42	46	5
B 30	25	45	56	42	46	5

Specification

- Steel
  - hardened (HRC 62 ±2)
- Fit sizes d_1, d_2 ground
- *ISO-Fundamental Tolerances → Page 323*
- RoHS compliant

On request

- other bores d_1

Information

The dimensions listed in this standard sheet are merely a selection of the (currently withdrawn) DIN standards.

For applications involving positioning, we recommend the combination with the GN 771.1 guide pins.

The tolerance n6 of the outside diameter d_2 guarantees a perfect pressfit in a mounting borehole H7.

see also...

- *Guide pins GN 771.1 → Main Catalogue Page 576*

Guide bushing with collar 1 2 3 DIN 172-B8,1-20-A		
	1	d_1
	2	l_1
	3	Type

Guide bushing without collar 1 2 3 DIN 179-B12-12-A		
	1	d_1
	2	l_1
	3	Type

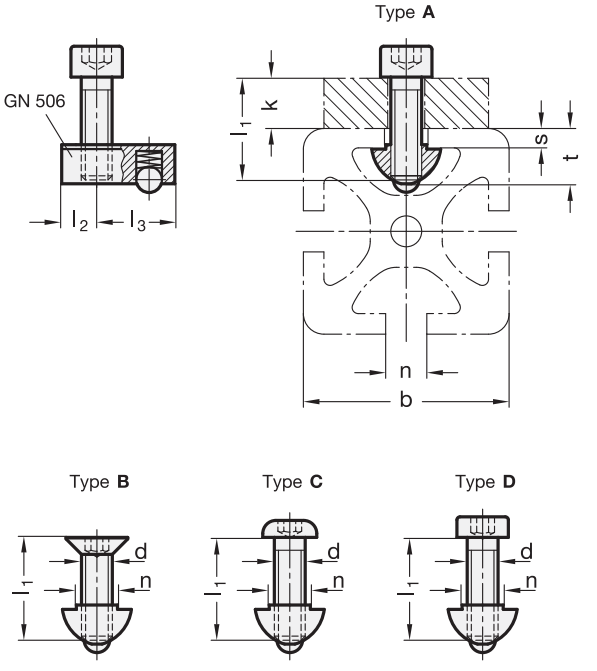

4 Type

- **A** with cylinder head screw DIN 912
- **B** with countersunk screw DIN 7991
- **C** with lens screw ISO 7380
- **D** with cylinder head screw DIN 7984

b	n [1]	d [2]	l_1 [3] Type A	Type B	Type C	Type D	k ≈ Clamping length	l_2	l_3	s ≈	t ≈
30	6	M 4	10	-	-	-	... 4	5	12	2,9	8,9
30	6	M 4	12	-	-	-	1 ... 6	5	12	2,9	8,9
30	6	M 4	16	-	-	-	5 ... 10	5	12	2,9	8,9
30	6	M 5	10	-	-	-	... 3	5	12	2,9	8,9
30	6	M 5	12	12	-	-	1 ... 5	5	12	2,9	8,9
30	6	M 5	14	-	-	-	3 ... 7	5	12	2,9	8,9
30	6	M 5	16	-	-	-	5 ... 9	5	12	2,9	8,9
30	6	M 5	18	-	-	-	7 ... 11	5	12	2,9	8,9
30	6	M 5	22	-	-	-	11 ... 15	5	12	2,9	8,9
30	6	M 6	-	-	-	10	... 3	5	12	2,9	8,9
30	6	M 6	12	12	-	-	1 ... 4	5	12	2,9	8,9
30	6	M 6	14	-	14	-	3 ... 6	5	12	2,9	8,9
30	6	M 6	16	16	-	-	5 ... 8	5	12	2,9	8,9
30	6	M 6	-	18	-	-	7 ... 10	5	12	2,9	8,9
30	6	M 6	20	-	-	-	9 ... 12	5	12	2,9	8,9
30	6	M 6	25	-	-	-	14 ... 17	5	12	2,9	8,9
40	8	M 4	12	-	-	-	... 5	7	15	4,6	11,4
40	8	M 4	14	-	-	-	1 ... 7	7	15	4,6	11,4
40	8	M 4	20	-	-	-	7 ... 13	7	15	4,6	11,4
40	8	M 5	12	-	-	-	... 4	7	15	4,6	11,4
40	8	M 5	14	14	-	-	1 ... 6	7	15	4,6	11,4
40	8	M 5	16	-	-	-	3 ... 8	7	15	4,6	11,4
40	8	M 5	18	-	-	-	5 ... 10	7	15	4,6	11,4
40	8	M 5	20	-	-	-	7 ... 12	7	15	4,6	11,4
40	8	M 5	22	-	-	-	9 ... 14	7	15	4,6	11,4
40	8	M 5	25	-	-	-	12 ... 17	7	15	4,6	11,4
40	8	M 6	14	14	-	14	1 ... 5	7	15	4,6	11,4
40	8	M 6	16	16	16	-	3 ... 7	7	15	4,6	11,4
40	8	M 6	18	18	-	-	5 ... 9	7	15	4,6	11,4
40	8	M 6	-	20	-	-	7 ... 11	7	15	4,6	11,4
40	8	M 6	22	-	22	-	9 ... 13	7	15	4,6	11,4
40	8	M 6	28	-	-	-	15 ... 19	7	15	4,6	11,4
40	8	M 8	14	-	-	-	1 ... 4	7	15	4,6	11,4
40	8	M 8	16	16	16	-	3 ... 6	7	15	4,6	11,4
40	8	M 8	18	-	18	-	5 ... 8	7	15	4,6	11,4
40	8	M 8	20	-	-	-	7 ... 10	7	15	4,6	11,4
40	8	M 8	28	-	-	-	15 ... 18	7	15	4,6	11,4

Specification

- T-Nuts GN 506
  Steel
  - zinc plated, blue passivated
  - Ball / Spring
    Stainless Steel
- Cylinder head screws DIN 912
  Counter sunk screws DIN 7991
  Lens head screws ISO 7380
  Cylinder head screws DIN 7984
  Steel
  zinc plated, blue passivated
- RoHS compliant

Information

Assembly sets GN 965 allow different standard element to be attached to the most common profile systems. Each set includes one T-nut GN 506 and one screw.

GN standards with assembly sets for profile systems → *Page 146*

see also...

• *T-Nuts GN 506 → Main Catalogue Page 570*

How to order

[1] [2] [3] [4]
GN 965-8-M6-18-B

1	n
2	d
3	l_1
4	Type

Assembly sets GN 965		Type A 	Type B 	Type C 	Type D
Compatible GN standards in ascending order of the standard numbers		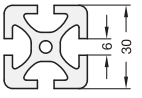		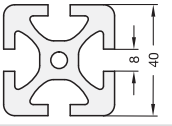	
Hinges GN 127 → *Main Catalogue Page 883*					
	GN 127-...-B		-		**GN 965-8-M6-20-B**
Mounting plate GN 139.3 (for hinges with / without safety switch GN 139.1 / GN 139.2) → *Page 258*					
	GN 139.3-170		**GN 965-6-M6-12-A**		**GN 965-8-M6-14-A**
Mounting plate GN 139.4 (for hinges with / without safety switch GN 139.1 / GN 139.2) → *Page 258*					
	GN 139.4-101		**GN 965-6-M6-12-A**		**GN 965-8-M6-14-A**
Flanged connector clamps GN 145 → *Page 287*					
	GN 145-...		-		**GN 965-8-M5-16-A**
Hinges GN 151.4 → *Page 263*					
	GN 151.4-...		-		**GN 965-8-M6-18-A**
Hinges GN 159 → *Page 266*					
	GN 159-54-17,5-17,5 GN 159-74-22,5-22,5		**GN 965-6-M6-16-B** -		- **GN 965-8-M6-18-B**
Double hinges GN 159.1 → *Page 268*					
	GN 159.1-89-35-35 GN 159.1-119-45-45		**GN 965-6-M6-16-B** -		- **GN 965-8-M6-18-B**

Assembly sets GN 965		Type A 	Type B 	Type C 	Type D
Compatible GN standards in ascending order of the standard numbers		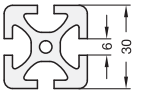		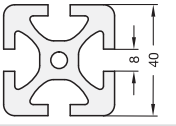	
Hinges GN 161 → *Main Catalogue Page 886*					
	GN 161-57 / 68 / 80	-		**GN 965-8-M6-16-B**	
Base plate connector clamps GN 162.3 → *Main Catalogue Page 989*					
	GN 162.3-...	**GN 965-6-M5-16-A**		**GN 965-8-M5-18-A**	
Fastening sets GN 181 (for cabinet „U“ handles) → *Page 38*					
	GN 181-ZD-8-M4-... GN 181-ZD-10-M5-... GN 181-ZD-...-M6-... GN 181-ZD-...-M8-...	**GN 965-6-M4-10-B** **GN 965-6-M5-12-B** **GN 965-6-M6-12-B** -		- **GN 965-8-M5-14-B** **GN 965-8-M6-14-B** **GN 965-8-M8-16-B**	
Tube supports GN 231 → *Page 291*					
	GN 231-B20 / B25 / B30 GN 231-V20 / V25 / V30	- -		**GN 965-8-M8-14-A** **GN 965-8-M8-14-A**	
Swivel clamp connector bases GN 271 → *Main Catalogue Page 1004*					
	GN 271-25-...	-		**GN 965-8-M5-18-A**	
Swivel clamp connector joints GN 281 → *Main Catalogue Page 1015*					
	GN 281-...	-		**GN 965-8-M5-18-A**	
Tubular handles GN 333 → *Page 41*					
	GN 333-28-...-B-...	**GN 965-6-M6-25-A**		**GN 965-8-M6-28-A**	

Assembly sets GN 965		Type A 	Type B 	Type C 	Type D
Compatible GN standards in ascending order of the standard numbers		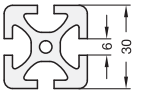		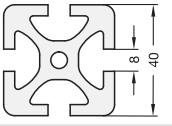	
Tubular handles GN 333.1 → *Main Catalogue Page 96*					
	GN 333.1-28-...-B-...		**GN 965-6-M6-14-C**		**GN 965-8-M6-16-C**
Oval tubular handles GN 334.1 → *Main Catalogue Page 115*					
	GN 334.1-36-...		-		**GN 965-8-M8-16-C**
Indexing plungers GN 412 → *Page 123*					
	GN 412-5-35-...-1 GN 412-6-35-...-1 GN 412-8-47-...-1 GN 412-10-47-...-1		**GN 965-6-M4-16-A** **GN 965-6-M4-16-A** **GN 965-6-M5-18-A** **GN 965-6-M5-18-A**		- - **GN 965-8-M5-20-A** **GN 965-8-M5-20-A**
Mounting blocks GN 412.1 → *Main Catalogue Page 452*					
	GN 412.1-35-...-1 GN 412.1-47-...-1		**GN 965-6-M4-16-A** **GN 965-6-M5-18-A**		- **GN 965-8-M5-20-A**
Spring latches GN 416 → *Page 124*					
	GN 416-6-38-... GN 416-8-38-... GN 416-8-46-... GN 416-10-38-... GN 416-10-46-... GN 416-12-46-...		**GN 965-6-M5-14-A** **GN 965-6-M5-14-A** - **GN 965-6-M5-14-A** - -		**GN 965-8-M5-16-A** **GN 965-8-M5-16-A** **GN 965-8-M6-16-A** **GN 965-8-M5-16-A** **GN 965-8-M6-16-A** **GN 965-8-M6-16-A**
Locators GN 416.1 → *Page 125*					
	GN 416.1-6-38 GN 416.1-8-38 GN 416.1-8-46 GN 416.1-10-38 GN 416.1-10-46 GN 416.1-12-46		**GN 965-6-M5-14-A** **GN 965-6-M5-14-A** - **GN 965-6-M5-14-A** - -		**GN 965-8-M5-16-A** **GN 965-8-M5-16-A** **GN 965-8-M6-16-A** **GN 965-8-M5-16-A** **GN 965-8-M6-16-A** **GN 965-8-M6-16-A**

Assembly sets GN 965		Type A 	Type B 	Type C 	Type D
Compatible GN standards in ascending order of the standard numbers		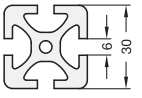		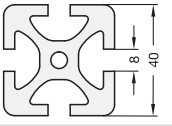	
Indexing plungers GN 417 → *Page 118 / 119*					
	GN 417-5-A / -B / -C GN 417-6-A / -B / -C GN 417-8-A / -B GN 417-8-C GN 417-10-A / -B / -C	**GN 965-6-M4-12-A** **GN 965-6-M5-14-A** **GN 965-6-M5-14-A** -		- **GN 965-8-M5-16-A** **GN 965-8-M5-16-A** **GN 965-8-M5-16-A** **GN 965-8-M6-16-A**	
Locators GN 417.1→ *Page 120*					
	GN 417.1-5 GN 417.1-6 GN 417.1-8 GN 417.1-10	**GN 965-6-M4-12-A** **GN 965-6-M5-14-A** **GN 965-6-M5-14-A** -		- **GN 965-8-M5-16-A** **GN 965-8-M5-16-A** **GN 965-8-M6-16-A**	
Base clamp mountings GN 473 → *Main Catalogue Page 1076*					
	GN 473-B8-... GN 473-B10 / B12-... GN 473-B15 / B16-... GN 473-B20-...	**GN 965-6-M4-10-A** - - -		**GN 965-8-M4-14-A** **GN 965-8-M5-12-A** **GN 965-8-M6-14-A** **GN 965-8-M6-18-A**	
Clamp mountings GN 477 → *Main Catalogue Page 1077*					
	GN 477-B8-... GN 477-B10 / B12-... GN 477-B15 / B16 / B20-...	**GN 965-6-M4-16-A** **GN 965-6-M5-18-A** **GN 965-6-M6-20-A**		**GN 965-8-M4-20-A** **GN 965-8-M5-20-A** **GN 965-8-M6-22-A**	
Flanged bolts GN 480 → *Main Catalogue Page 1084*					
	GN 480-8-... GN 480-10 / 12-... GN 480-15 / 16 / 20-...	**GN 965-6-M4-10-A** **GN 965-6-M5-10-A** **GN 965-6-M6-12-A**		**GN 965-8-M4-12-A** **GN 965-8-M5-12-A** **GN 965-8-M6-14-A**	
Cabinet U-Handles GN 528 → *Main Catalogue Page 70*					
	GN 528-...-94-6,5-... GN 528-...-117-6,5-.. GN 528-...-117-8,5-... GN 528-...-132-8,5-... GN 528-...-140-8,5-... GN 528-...-160-8,5-... GN 528-...-179-8,5-...	**GN 965-6-M6-14-A** **GN 965-6-M6-16-A** - - - - -		**GN 965-8-M6-16-A** **GN 965-8-M6-16-A** **GN 965-8-M8-18-A** **GN 965-8-M8-18-A** **GN 965-8-M8-18-A** **GN 965-8-M8-20-A** **GN 965-8-M8-20-A**	

Assembly sets GN 965		Type A 	Type B 	Type C 	Type D
Compatible GN standards in ascending order of the standard numbers		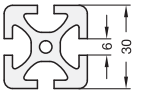		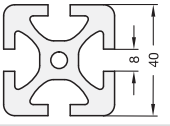	
Cabinet U-Handles GN 565.1 → *Page 31*					
	GN 565.1-20-... GN 565.1-26-...		**GN 965-6-M5-22-A** -		- **GN 965-8-M6-22-A**
Inclined cabinet U-Handles GN 565.2 → *Main Catalogue Page 64*					
	GN 565.2-26-128-B-... GN 565.2-26-160-B-...		- -		**GN 965-8-M6-22-C** **GN 965-8-M6-22-C**
Cam action indexing plungers GN 612.2 → *Main Catalogue Page 457*					
	GN 612.2-...-16-... GN 612.2-...-20-...		**GN 965-6-M5-18-A** **GN 965-6-M5-22-A**		**GN 965-8-M5-22-A** **GN 965-8-M5-25-A**
Cam action indexing plungers GN 612.9 → *Main Catalogue Page 458*					
	GN 612.9-...-16-... GN 612.9-...-20-...		**GN 965-6-M5-18-A** **GN 965-6-M5-22-A**		**GN 965-8-M5-20-A** **GN 965-8-M5-25-A**
Cabinet U-Handles GN 628 → *Main Catalogue Page 78*					
	GN 628-...-117-6,5-B-... GN 628-...-117-8,5-B-... GN 628-...-150-8,5-B-... GN 628-...-179-8,5-B-...		**GN 965-6-M6-16-A** - - -		- **GN 965-8-M8-28-A** **GN 965-8-M8-28-A** **GN 965-8-M8-28-A**
Ledge handles GN 630 → *Page 42*					
	GN 630-114-B-...		**GN 965-6-M6-18-B**		**GN 965-8-M6-22-C**
Cabinet U-Handles GN 630.1 → *Page 39*					
	GN 630.1-114-B-...		**GN 965-6-M6-18-B**		**GN 965-8-M6-22-C**

Assembly sets GN 965		Type A 	Type B 	Type C 	Type D
Compatible GN standards in ascending order of the standard numbers		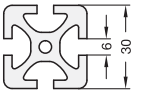		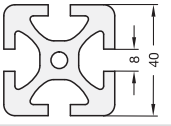	
Panel support clamp GN 649 → *Page 304*					
	GN 649-35-E	**GN 965-6-M6-10-D**		**GN 965-8-M6-14-D**	
Cabinet U-Handles GN 667 → *Main Catalogue Page 111*					
	GN 667-20-...	-		**GN 965-8-M8-20-A**	
Cam action indexing plungers GN 722.3 → *Main Catalogue Page 463*					
	GN 722.3-8-... GN 722.3-10-... GN 722.3-12-... GN 722.3-14-...	- - - -		**GN 965-8-M6-18-A** **GN 965-8-M6-18-A** **GN 965-8-M6-18-A** **GN 965-8-M6-18-A**	
Cabinet U-Handles GN 728 → *Main Catalogue Page 73*					
	GN 728-120-B-... GN 728-180-B-...	**GN 965-6-M6-14-A** -		- **GN 965-8-M8-18-A**	
Angle pieces / Shackles GN 967 → *Page 306*					
	GN 967-...-20-...-1-... GN 967-...-20-...-2-... GN 967-...-30-...-1-... GN 967-...-30-...-2-... GN 967-...-40-...-1-... GN 967-...-40-...-2-... GN 967-...-45-...-1-... GN 967-...-45-...-2-...	**GN 965-6-M5-12-A** **GN 965-6-M5-12-B** **GN 965-6-M6-12-A** **GN 965-6-M6-12-B** - - - -		**GN 965-8-M5-14-A** **GN 965-8-M5-14-B** **GN 965-8-M6-14-A** **GN 965-8-M6-14-B** **GN 965-8-M8-16-A** **GN 965-8-M8-16-B** **GN 965-8-M8-16-A** **GN 965-8-M8-16-B**	
Threaded flanges GN 3490 → *Page 303*					
	GN 3490-45-... GN 3490-60-...	**GN 965-6-M6-14-B** -		- **GN 965-8-M8-16-B**	

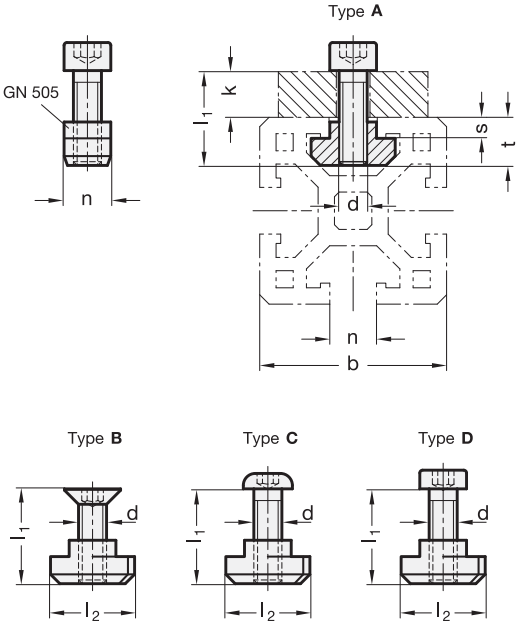

4 Type

A with cylinder head screw DIN 912
B with countersunk screw DIN 7991
C with lens screw ISO 7380
D with cylinder head screw DIN 7984

b	1 n	2 d	3 l_1 Type A	Type B	Type C	Type D	k ≈ Clamping length	l_2 ±0,5	s ≈	t ≈
30	8	M 4	10	-	-	-	... 6	16	2,2	7,2
30	8	M 4	12	-	-	-	2 ... 8	16	2,2	7,2
30	8	M 4	16	-	-	-	6 ... 12	16	2,2	7,2
30	8	M 5	10	-	-	-	... 5	16	2,2	7,2
30	8	M 5	12	12	-	-	2 ... 7	16	2,2	7,2
30	8	M 5	14	-	-	-	4 ... 9	16	2,2	7,2
30	8	M 5	18	-	-	-	8 ... 13	16	2,2	7,2
30	8	M 5	20	-	-	-	10 ... 15	16	2,2	7,2
30	8	M 5	22	-	-	-	12 ... 17	16	2,2	7,2
30	8	M 6	10	-	-	10	... 4	16	2,2	7,2
30	8	M 6	12	12	-	-	2 ... 6	16	2,2	7,2
30	8	M 6	14	14	14	-	4 ... 8	16	2,2	7,2
30	8	M 6	16	16	-	-	6 ... 10	16	2,2	7,2
30	8	M 6	-	18	-	-	8 ... 12	16	2,2	7,2
30	8	M 6	20	-	-	-	10 ... 14	16	2,2	7,2
30	8	M 6	25	-	-	-	15 ... 19	16	2,2	7,2
40 / 45	10	M 4	14	-	-	-	... 8	19	6	11,8
40 / 45	10	M 5	12	-	-	-	... 5	19	6	11,8
40 / 45	10	M 5	14	14	-	-	... 7	19	6	11,8
40 / 45	10	M 5	16	-	-	-	3 ... 9	19	6	11,8
40 / 45	10	M 5	18	-	-	-	5 ... 11	19	6	11,8
40 / 45	10	M 5	20	-	-	-	7 ... 13	19	6	11,8
40 / 45	10	M 5	25	-	-	-	12 ... 18	19	6	11,8
40 / 45	10	M 6	14	14	-	14	... 6	19	6	11,8
40 / 45	10	M 6	16	-	-	-	3 ... 8	19	6	11,8
40 / 45	10	M 6	18	18	18	-	5 ... 10	19	6	11,8
40 / 45	10	M 6	20	20	-	-	7 ... 12	19	6	11,8
40 / 45	10	M 6	22	22	22	-	9 ... 14	19	6	11,8
40 / 45	10	M 6	28	-	-	-	15 ... 20	19	6	11,8
40 / 45	10	M 8	14	-	-	-	... 5	19	6	11,8
40 / 45	10	M 8	16	16	16	-	3 ... 7	19	6	11,8
40 / 45	10	M 8	18	-	18	-	5 ... 9	19	6	11,8
40 / 45	10	M 8	20	-	-	-	7 ... 11	19	6	11,8
40 / 45	10	M 8	28	-	-	-	15 ... 19	19	6	11,8

Specification

- T-Nut GN 505
  with increased torque (Type MB)
  Steel
  zinc plated , blue passivated
- Cylinder head screws DIN 912
  Counter sunk screws DIN 7991
  Lens head screws ISO 7380
  Cylinder head screws DIN 7984
  Steel
  zinc plated, blue passivated
- RoHS compliant

Information

Assembly sets GN 968 allow different standard element to be attached to the most common profile systems. Each set includes one T-nut GN 505 and one screw.

GN standards with assembly sets for profile systems → *Page 152*

see also...

- *T-Nuts GN 505 → Main Catalogue Page 567*

How to order

1 2 3 4

GN 968-8-M5-18-A

1	n
2	d
3	l_1
4	Type

Assembly sets GN 968		Type A Type B Type C Type D 	
Compatible GN standards in ascending order of the standard numbers		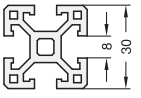	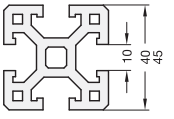
Hinges GN 127 → *Main Catalogue Page 883*			
	GN 127-...-B	-	**GN 968-10-M6-20-B** [1]
Mounting plate GN 139.3 (for hinges with / without safety switch GN 139.1 / GN 139.2) → *Page 258*			
	GN 139.3-170	**GN 968-8-M6-10-A**	**GN 968-10-M6-14-A**
Mounting plate GN 139.4 (for hinges with / without safety switch GN 139.1 / GN 139.2) → *Page 258*			
	GN 139.4-101	**GN 968-8-M6-10-A**	**GN 968-10-M6-14-A**
Flanged connector clamps GN 145 → *Page 287*			
	GN 145-...	-	**GN 968-10-M5-18-A**
Hinges GN 151.4 → *Page 263*			
	GN 151.4-...-B	-	**GN 968-10-M6-18-A** [1]
Hinges GN 159 → *Page 266*			
	GN 159-54-17,5-17,5 GN 159-74-22,5-22,5 GN 159-84-25-25	**GN 968-8-M6-16-B** - -	- **GN 968-10-M6-18-B** [1] **GN 968-10-M6-18-B** [2]
Double hinges GN 159.1 → *Page 268*			
	GN 159.1-89-35-35 GN 159.1-119-45-45 GN 159.1-134-50-50	**GN 968-8-M6-16-B** - -	- **GN 968-10-M6-18-B** [1] **GN 968-10-M6-18-B** [2]

[1]) only for profile 40 x 40 [2]) only for profile 45 x 45

Assembly sets GN 968		Type A Type B 	Type C Type D
Compatible GN standards in ascending order of the standard numbers		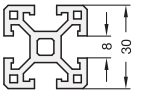	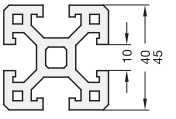
Hinges GN 161 → *Main Catalogue Page 886*			
	GN 161-57 / 68 / 80	**GN 968-8-M6-14-B**	**GN 968-10-M6-18-B**
Base plate connector clamps GN 162.3 → *Main Catalogue Page 989*			
	GN 162.3-...	**GN 968-8-M5-14-A**	**GN 968-10-M5-18-A**
Fastening sets GN 181 (for cabinet „U“ handles) → *Page 38*			
	GN 181-ZD-10-M5-... GN 181-ZD-... -M6-... GN 181-ZD-... -M8-...	**GN 968-8-M5-12-B** **GN 968-8-M6-12-B** -	- **GN 968-10-M6-16-B** **GN 968-10-M8-16-B**
Tube supports GN 231 → *Page 291*			
	GN 231-B20 / B25 / B30 GN 231-V20 / V25 / V30	- -	**GN 968-10-M8-14-A** **GN 968-10-M8-14-A**
Swivel clamp connector bases GN 271 → *Main Catalogue Page 1004*			
	GN 271-25-...	-	**GN 968-10-M5-18-A**
Swivel clamp connector joints GN 281 → *Main Catalogue Page 1015*			
	GN 281-...	-	**GN 968-10-M5-18-A**
Tubular handles GN 333 → *Page 41*			
	GN 333-28-...-B-...	**GN 968-8-M6-25-A**	**GN 968-10-M6-28-A**

Assembly sets GN 968		Type A Type B	Type C Type D
Compatible GN standards in ascending order of the standard numbers		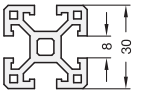	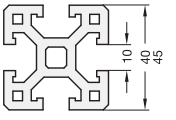
Tubular handles GN 333.1 → *Main Catalogue Page 96*			
	GN 333.1-28-...-B-...	**GN 968-8-M6-14-C**	**GN 968-10-M6-18-C**
Oval tubular handles GN 334.1 → *Main Catalogue Page 115*			
	GN 334.1-36-...	-	**GN 968-10-M8-16-C**
Indexing plungers GN 412 → *Page 123*			
	GN 412-8-47-...-1 GN 412-10-47-...-1	**GN 965-6-M5-18-A** **GN 965-6-M5-18-A**	**GN 965-8-M5-20-A** **GN 965-8-M5-20-A**
Mounting blocks GN 412.1 → *Main Catalogue Page 452*			
	GN 412.1-47-...-1	**GN 968-8-M5-18-A**	-
Spring latches GN 416 → *Page 124*			
	GN 416-6-38 GN 416-8-38 GN 416-8-46 GN 416-10-38 GN 416-10-46 GN 416-12-46	**GN 968-8-M5-14-A** **GN 968-8-M5-14-A** - **GN 968-8-M5-14-A** - -	**GN 968-10-M5-18-A** **GN 968-10-M5-18-A** **GN 968-10-M6-18-A** **GN 968-10-M5-18-A** **GN 968-10-M6-18-A** **GN 968-10-M6-18-A**
Locators GN 416.1 → *Page 125*			
	GN 416.1-6-38 GN 416.1-8-38 GN 416.1-8-46 GN 416.1-10-38 GN 416.1-10-46 GN 416.1-12-46	**GN 968-8-M5-14-A** **GN 968-8-M5-14-A** - **GN 968-8-M5-14-A** - -	**GN 968-10-M5-18-A** **GN 968-10-M5-18-A** **GN 968-10-M6-18-A** **GN 968-10-M5-18-A** **GN 968-10-M6-18-A** **GN 968-10-M6-18-A**

Assembly sets GN 968		Type A 	Type B 	Type C 	Type D
Compatible GN standards in ascending order of the standard numbers		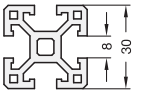		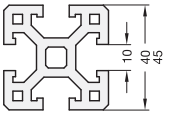	
Indexing plungers GN 417 → *Page 118 / 119*					
	GN 417-5-A / -B GN 417-6-A / -B / -C GN 417-8-A / -B / -C GN-417-10-A / -B / -C	**GN 968-8-M4-12-A** **GN 968-8-M5-14-A** **GN 968-8-M5-14-A**	**-** **GN 968-10-M5-16-A** **GN 968-10-M5-18-A** **GN 968-10-M6-18-A**		
Locators GN 417.1→ *Page 120*					
	GN 417.1-5 GN 417.1-6 GN 417.1-8 GN 417.1-10	**GN 968-8-M4-12-A** **GN 968-8-M5-14-A** **GN 968-8-M5-14-A** **-**	**-** **GN 968-10-M5-18-A** **GN 968-10-M5-18-A** **GN 968-10-M6-18-A**		
Base clamp mountings GN 473 → *Main Catalogue Page 1076*					
	GN 473-B8-... GN 473-B10 / B12-... GN 473-B15 / B16-... GN 473-B20-...	**GN 968-8-M4-10-A** **-** **-** **-**	**GN 968-10-M4-14-A** **GN 968-10-M5-14-A** **GN 968-10-M6-14-A** **GN 968-10-M6-18-A**		
Clamp mountings GN 477 → *Main Catalogue Page 1077*					
	GN 477-B8-... GN 477-B10 / B12-... GN 477-B15 / B16 / B20-...	**GN 968-8-M4-16-A** **GN 968-8-M5-18-A** **GN 968-8-M6-20-A**	**-** **GN 968-10-M5-20-A** **GN 968-10-M6-22-A**		
Flange bolts GN 480 → *Main Catalogue Page 1084*					
	GN 480-8-... GN 480-10 / 12-... GN 480-15 / 16 / 20-...	**GN 968-8-M4-10-A** **GN 968-8-M5-10-A** **GN 968-8-M6-12-A**	**-** **GN 968-10-M5-12-A** **GN 968-10-M6-14-A**		
Cabinet U-Handles GN 528 → *Main Catalogue Page 70*					
	GN 528-...-94-6,5-... GN 528-...-117-6,5-... GN 528-...-117-8,5-... GN 528-...-122-8,5-... GN 528-...-132-8,5-... GN 528-...-140-8,5-... GN 528-...-160-8,5-... GN 528-...-179-8,5-... GN 528-...-235-8,5-...	**GN 968-8-M6-14-A** **GN 968-8-M6-16-A** **-** **-** **-** **-** **-** **-** **-**	**GN 968-10-M6-16-A** **GN 968-10-M6-20-A** **GN 968-10-M8-16-A** **GN 968-10-M8-16-A** **GN 968-10-M8-18-A** **GN 968-10-M8-18-A** **GN 968-10-M8-20-A** **GN 968-10-M8-20-A** **GN 968-10-M8-20-A**		

Assembly sets GN 968		Type A / Type B	Type C / Type D
Compatible GN standards in ascending order of the standard numbers		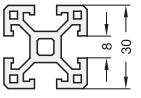	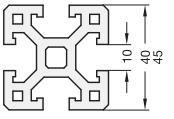
Cabinet U-Handles GN 565.1 → *Page 31*			
	GN 565.1-20-... GN 565.1-26-...	**GN 968-8-M5-20-A** -	- **GN 968-10-M6-22-A**
Inclined cabinet U-Handles GN 565.2 → *Main Catalogue Page 64*			
	GN 565.2-26-128-B-... GN 565.2-26-160-B-...	- -	**GN 968-10-M6-22-C** **GN 968-10-M6-22-C**
Cam action indexing plungers GN 612.2 → *Main Catalogue Page 457*			
	GN 612.2-...-16-... GN 612.2-...-20-...	**GN 968-8-M5-18-A** **GN 968-8-M5-22-A**	- **GN 968-10-M5-25-A**
Cam action indexing plungers GN 612.9 → *Main Catalogue Page 458*			
	GN 612.9-...-16-... GN 612.9-...-20-...	**GN 968-8-M5-18-A** **GN 968-8-M5-22-A**	- **GN 968-10-M5-25-A**
Cabinet U-Handles GN 628 → *Main Catalogue Page 78*			
	GN 628-...-117-6,5-B-... GN 628-...-117-8,5-B-... GN 628-...-150-8,5-B-... GN 628-...-179-8,5-B-...	**GN 968-8-M6-14-A** - - -	- **GN 968-10-M8-28-A** **GN 968-10-M8-28-A** **GN 968-10-M8-28-A**
Ledge handles GN 630 → *Page 42*			
	GN 630-114-B-...	**GN 968-8-M6-18-B**	**GN 968-10-M6-22-B**
Cabinet U-Handles GN 630.1 → *Page 39*			
	GN 630.1-114-B-...	**GN 968-8-M6-18-B**	**GN 968-10-M6-22-B**

Assembly sets GN 968		Type A Type B 	Type C Type D
Compatible GN standards in ascending order of the standard numbers		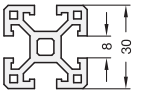	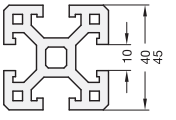
Panel support clamp GN 649 → *Page 304*			
	GN 649-35-E	**GN 968-8-M6-10-D**	**GN 968-10-M6-14-D**
Cabinet U-Handles GN 667 → *Main Catalogue Page 111*			
	GN 667-20-...	-	**GN 968-10-M8-20-A**
Cam action indexing plungers GN 722.3 → *Main Catalogue Page 463*			
	GN 722.3-8-... GN 722.3-10-... GN 722.3-12-... GN 722.3-14-...	- - - -	**GN 968-10-M6-18-A** **GN 968-10-M6-18-A** **GN 968-10-M6-18-A** **GN 968-10-M6-18-A**
Cabinet U-Handles GN 728 → *Main Catalogue Page 73*			
	GN 728-120-B-... GN 728-180-B-...	**GN 968-8-M6-14-A** -	- **GN 968-10-M8-18-A**
Angle pieces / Shackles GN 967 → *Page 306*			
	GN 967-...-20-...-1-... GN 967-...-20-...-2-... GN 967-...-30-...-1-... GN 967-...-30-...-2-... GN 967-...-40-...-1-... GN 967-...-40-...-2-... GN 967-...-45-...-1-... GN 967-...-45-...-2-...	**GN 968-8-M5-12-A** **GN 968-8-M5-12-B** **GN 968-8-M6-12-A** **GN 968-8-M6-12-B** - - - -	**GN 968-10-M5-14-A** **GN 968-10-M5-14-B** **GN 968-10-M6-14-A** **GN 968-10-M6-14-B** **GN 968-10-M8-16-A** **GN 968-10-M8-16-B** **GN 968-10-M8-16-A** **GN 968-10-M8-16-B**
Threaded flanges GN 3490 → *Page 303*			
	GN 3490-45-... GN 3490-60-...	**GN 968-6-M6-14-B** -	**GN 968-8-M6-16-B** **GN 968-8-M8-16-B**

GN 709.6 Clamping pads

adjustable

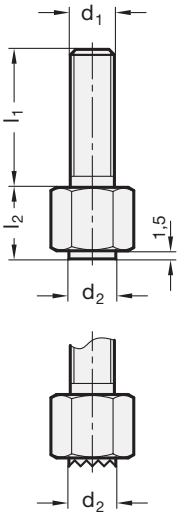

Application example of different clamping pads with O-ring

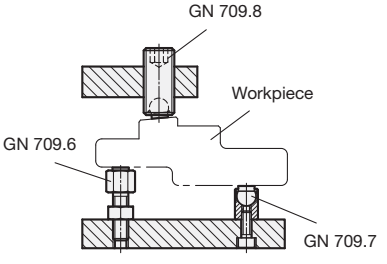

3 Type

B Ball steel, smooth contact face
R Ball steel, serrated contact face
K Ball plastic, smooth contact face

1 d_1	2 l_1			d_2	d_3 Ball-Ø	l_2	A/F	e
M 6	12	25	40	6	7	9,5	10	11,5
M 8	12	25	40	8,5	10	13	13	15

Specification

- Steel
  - tempered
  - Tensile strength class 10.9
- Ball
  - Steel hardened (54+2 HRC)
  - Plastic (Polyacetal POM)
- O-Ring
  Rubber NBR (Perbunan)
- RoHS compliant

Information

Clamping pads GN 709.6 are also used in jig and fixture construction, for example for clamping workpieces, as movable bearing surface or as stop. The swivel-mounted ball compensates uneven and non-parallel contact surfaces by as much as 10°. It is also secured against further twisting.

The O-ring holds the ball in position and prevents dirt from penetrating, resulting in a long service life and constant mobility.

see also...

- *Clamping pads GN 709.8 (adjustable, with O-Ring)* → *Page 160*
- *Clamping pads GN 709.1 / GN 709.15 (with screw)* → *Main Catalogue Page 588*
- *Clamping pads GN 709.2 / GN 709.25 (with internal thread)* → *Main Catalogue Page 589*
- *Clamping pads GN 709.3 / GN 709.35 (adjustable)* → *Main Catalogue Page 586*

How to order

1 2 3

GN 709.6-M6-12-B

1	d_1
2	l_1
3	Type

GN 709.7 Clamping pads

with female thread

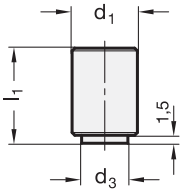

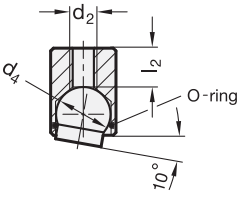

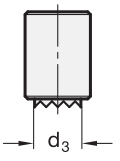

Application example of different clamping pads with O-ring

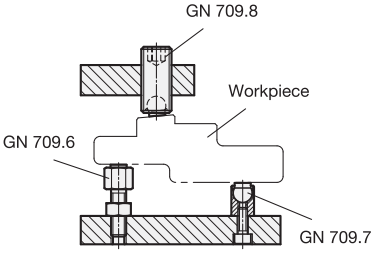

3 Type

B Ball steel, smooth contact face
R Ball steel, serrated contact face
K Ball plastic, smooth contact face

1 d_1 h9	2 l_1 ±0,13	d_2	d_3	d_4 Ball-Ø	l_2
10	12	M 4	6	7	5,6
10	25	M 4	6	7	18,6
13	16	M 5	8,5	10	7,2
13	25	M 5	8,5	10	16,2

Specification

- Steel
  - tempered
  - Tensile strength class 10.9
- Ball
  - Steel hardened (54+2 HRC)
  - Plastic (Polyacetal POM)
- O-Ring
  Rubber NBR (Perbunan)
- RoHS compliant

Information

Clampimg pads GN 709.7 are also used in jig and fixture construction, for example for clamping workpieces, as movable bearing surface or as stop. The swivel-mounted ball compensates uneven and non-parallel contact surfaces by as much as 10°. It is also secured against further twisting.

The O-ring holds the ball in position and prevents dirt from penetrating, resulting in a long service life and constant mobility.

see also...

- *Clamping pads GN 709.8 (adjustable, with O-Ring)* → *Page 160*
- *Clamping pads GN 709.1 / GN 709.15 (with screw)* → *Main Catalogue Page 588*
- *Clamping pads GN 709.2 / GN 709.25 (with internal thread)* → *Main Catalogue Page 589*
- *Clamping pads GN 709.3 / GN 709.35 (adjustable)* → *Main Catalogue Page 586*

How to order

1 2 3

GN 709.7-13-25-B

1	d_1
2	l_1
3	Type

GN 709.8 Clamping pads

adjustable

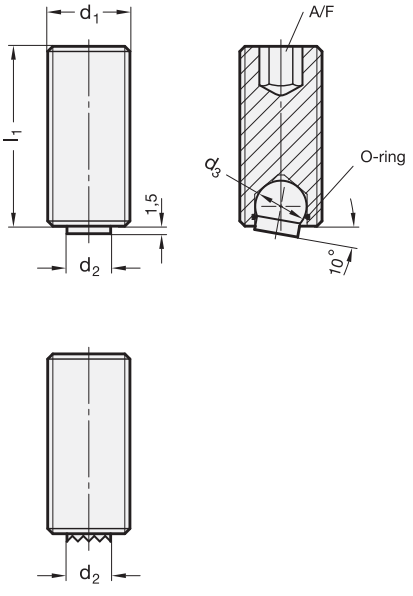

Application example of different clamping pads with O-ring

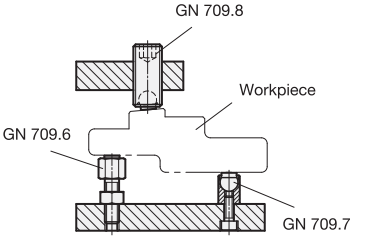

3 Type

B Ball steel, smooth contact face

R Ball steel, serrated contact face

K Ball plastic, smooth contact face

1 d_1	2 l_1 ±0,13			d_2	d_3 Ball-Ø	A/F
M 12	25	35	50	6	7	6
M 16	25	35	50	8,5	10	8

Specification

- Steel
  - tempered
  - Tensile strength class 10.9
- Ball
  - Steel hardened (54+2 HRC)
  - Plastic (Polyacetal POM)
- O-Ring
  Rubber NBR (Perbunan)
- RoHS compliant

Information

Clampimg pads GN 709.8 are also used in jig and fixture construction, for example for clamping workpieces, as movable bearing surface or as stop. The swivel-mounted ball compensates uneven and non-parallel contact surfaces by as much as 10°. It is also secured against further twisting.

The O-ring holds the ball in position and prevents dirt from penetrating, resulting in a long service life and constant mobility.

see also...

- *Clamping pads GN 709.6 (adjustable, with O-Ring)* → *Page 158*
- *Clamping pads GN 709.7 (with O-Ring)* → *Page 159*
- *Clamping pads GN 709.1 / GN 709.15 (with screw)* → *Main Catalogue Page 588*
- *Clamping pads GN 709.2 / GN 709.25 (with internal thread)* → *Main Catalogue Page 589*
- *Clamping pads GN 709.3 / GN 709.35 (adjustable)* → *Main Catalogue Page 586*

How to order

GN 709.8-M12-25-B (1 2 3)

1	d_1
2	l_1
3	Type

GN 6311.1 Thrust pads

for grub screws DIN 6332, tommy screws DIN 6304 / DIN 6306

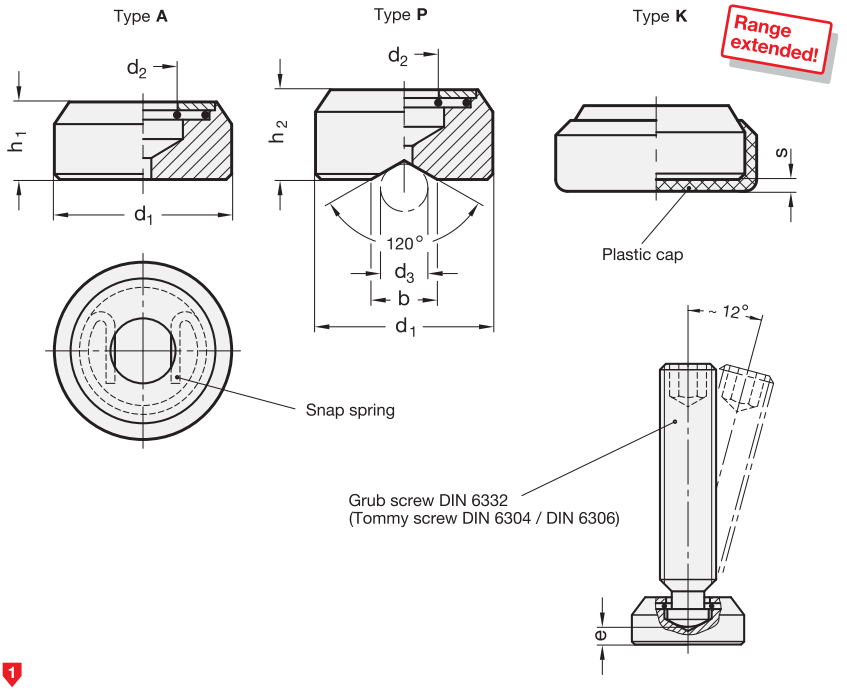

2 Type

A Thrust pad surface plain, without plastic cap

P Thrust pad surface with prism, without plastic cap

K Thrust pad surface plain, with plastic cap

1

d_1	b	d_2 +0,2	d_3		e ≈		h_1	h_2	s	Grub screw DIN 6332	
			min.	max.	Type A	Type P					
16	10	6,3	7,5	20	2,2	5,3	8	11	1,5	M 8	-
20	12	9,2	7,5	24	2,6	5,6	10	13	1,5	M 10	M 12
25	16	9,2	7,5	32	2,9	6,9	11	15	1,5	M 10	M 12
32	22	12,5	7,5	44	4,5	9,2	14	18	1,5	M 16	-

Specification

- Steel
  blackened
- Circlip
  Spring steel wire
- Plastic cap (Polyacetal POM)
  - natural colour
  - temperature resistant up to 100 °C
- *Plastic characteristics → Page 331*
- RoHS compliant

Information

Thrust pads GN 6311.1 are used in conjunction with grub screws fitted with thrust point (grub screws DIN 6332, tommy screws DIN 6304 and DIN 6306) to transmit clamping force. They align themselves on uneven and non-parallel surfaces and thus prevent the rotating force being transmitted to the workpiece.

The plastic cap prevents damage to delicate workpieces.

The unique shape of the non-removable retaining ring permits easy insertion and removal of grub screws into or from the thrust pad.

Thrust pads GN 6311.1 can be used in conjunction with DIN 6332 grub screws as levelling pad.

see also...

- *Levelling feet GN 6311.4 → Main Catalogue Page 818*
- *Grub screws DIN 6332 → Main Catalogue Page 592*
- *Tommy screws DIN 6304 / DIN 6306 → Main Catalogue Page 256*
- *Thrust pads GN 631 (Plastic) → Main Catalogue Page 597*
- *Stainless Steel-Thrust pads GN 631.5 → Main Catalogue Page 597*

How to order		
GN 6311.1-25-K (1 2)	1	d_1
	2	Type

Levelling elements

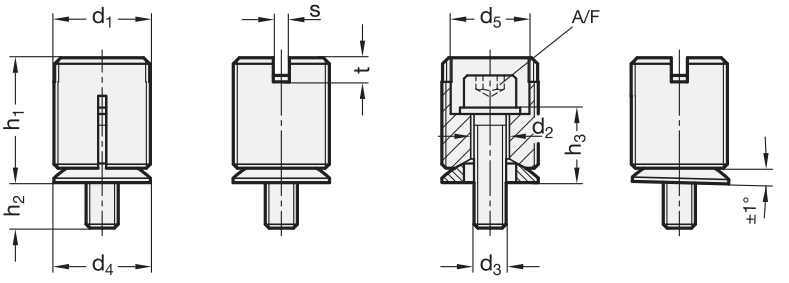

Inox
Stainless
Steel

Application example

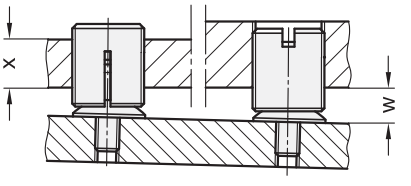

1 d1	2 d2	d3	d4	d5	h1	h2	h3	s	A/F	t	w max.	x min.	Static load F in kN	Code no. Assembly tool
M 12 x 1	4,5	M 4	12	9,1	19,1	10,9	9,1	2	3	3	8	8	4,4	GN 355.1-12
M 18 x 1	7	M 6	17	12,6	26,8	10,1	14,9	2	5	3	13	12	10	GN 355.1-18
M 24 x 1,5	9	M 8	24	19,6	31,1	11,3	18,7	4	6	6	17	16	29,5	GN 355.1-24
M 30 x 1,5	13	M 12	30	25,6	32,6	20,4	19,6	4	10	6	17	20	43	GN 355.1-30
M 36 x 1,5	18	M 16	36	31,6	45,7	15,8	24,2	4	14	6	21	24	91	GN 355.1-36

Specification

3

- Steel — **ST**
  blackened
  Spherical washer
  Steel, case-hardened
- Stainless Steel — **NI**
  AISI 303
  Spherical washer
  AISI 303
- Cylinder head screw DIN 912
  Stainless Steel A2-70
- Washer DIN 433
  Stainless Steel AISI 304
- *Stainless Steel characteristics* → *Page 334*
- RoHS compliant

Accessory

- Assembly tool GN 355.1
  (Code no. see table)

Information

Levelling elements GN 355 are used for levelling and adjustment in machines and equipment.

They consist of a levelling screw, a cylinder screw with disk and a spherical washer. After making the adjustment using the assembly tools GN 355.1 available as accessory, the screw is tightened firmly causing the levelling screw and the spherical washer DIN 6319 underneath to spread and is so secured against twisting in the taphole.

The values for w and x given in the table and for the static load capacity are to be seen as reference values which may differ depending on the prevailing situation. In general, they do not constitute a warranty of condition. The user must determine whether the product is suitable for the intended purpose.

How to order

1 2 3
GN 355-M36x1,5-18-NI

1	d_1
2	d_2
3	Material

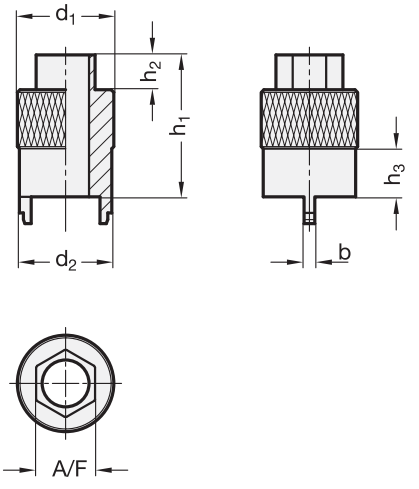

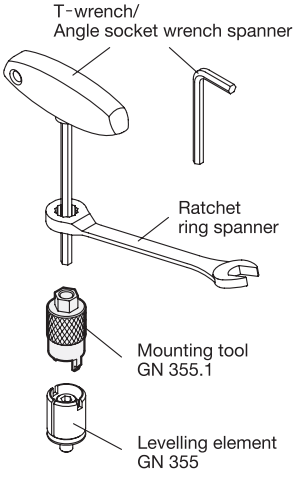

Example of application

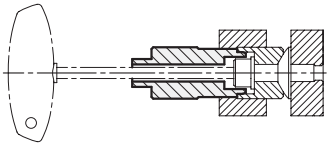

d_1	b	d_2	h_1	h_2	h_3	A/F	max. permissible torque in Nm
12	2	11	35	7	6	8	20
18	2	17	39	8	9	11	50
24	4	22,5	43	9	12	13	75
30	4	28,5	48	11	15	17	100
36	4	34,5	53	13	18	22	150

Specification

- Steel
  - surface hardened
  - blackened
- RoHS compliant

Information

The assembly tools GN 355.1 serve to adjust the levelling elements GN 355. It is used in connection with a T-wrench or a hexagonal angle socket spanner. To ease levelling, the top end of the assembly tool has an external hexagon head which is used for turning the levelling screw with a ring spanner, ideally with a ratchet function.

For adjustment, first use the assembly tool to turn the levelling screw of the levelling element into the desired position and at the same time tighten the screw to secure the levelling element. To ensure that the setting found does not change, the assembly tool may be used to counterhold.

How to order	1	d_1
GN 355.1-36		

Set collars

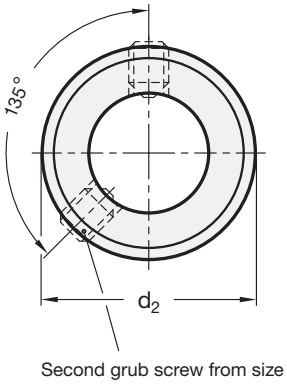

Second grub screw from size d_1 = 72

Type **A**

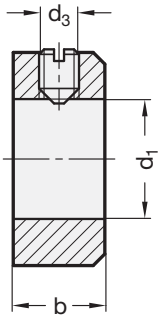

Type **E**

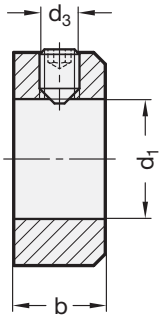

Range extended!

Rostfrei Inox Stainless Steel

2 Type

A Grub screw with slot ISO 7434 (DIN 553)

E Grub screw with internal hexagon DIN 914

1

d_1 H8			d_2	d_3	b js14
Steel blackened Type A Type E	Steel * zinc plated ZB Type E	Stainless Steel NI Type E			
5	5	5	10	M 3 x 4	6
6	6	6	12	M 4 x 5	8
7	7	7	12	M 4 x 5	8
8	8	8	16	M 4 x 6	8
9	9	9	18	M 5 x 8	10
10	10	10	20	M 5 x 8	10
11	11	11	20	M 5 x 8	10
12	12	12	22	M 6 x 8	12
13	13	13	22	M 6 x 8	12
14	14	14	25	M 6 x 8	12
15	15	15	25	M 6 x 8	12
16	16	16	28	M 6 x 8	12
18	18	18	32	M 6 x 8	14
20	20	20	32	M 6 x 8	14
22	22	22	36	M 6 x 10	14
24	24	24	40	M 8 x 12	16
25	25	25	40	M 8 x 10	16
26	26	26	40	M 8 x 10	16
28	28	28	45	M 8 x 12	16

1

d_1 H8			d_2	d_3	b js14
Steel blackened Type A Type E	Steel * zinc plated ZB Type E	Stainless Steel NI Type E			
30	30	30	45	M 8 x 10	16
32	32	32	50	M 8 x 12	16
34	-	34	50	M 8 x 12	16
35	35	35	56	M 8 x 12	16
36	-	36	56	M 8 x 12	16
38	-	38	56	M 8 x 12	16
40	40	40	63	M 10 x 16	18
42	-	42	63	M 10 x 16	18
45	45	45	70	M 10 x 16	18
48	-	48	70	M 10 x 16	18
50	50	50	80	M 10 x 16	18
52	-	-	80	M 10 x 16	18
55	-	-	80	M 10 x 16	18
60	60	-	90	M 10 x 16	20
65	-	-	100	M 10 x 20	20
70	70	-	100	M 10 x 20	20
75	-	-	110	M 12 x 20	22
80	80	-	110	M 12 x 20	22

* The tolerances given in accordance with DIN 705 apply to blank set collars. As a rule, the surface treament has no detrimental effect on the proper function.

Set collars GN 705 → *Page 164*
Semi-split set collars GN 706.2 → *Page 166*
Split set collars GN 707.2 → *Page 167*
Quick release set collars GN 704 → *Page 169*

Specification

	3
• Steel blackened (Standard)	—
• Steel zinc plated, blue passivated	ZB
• Stainless Steel AISI 303	NI

- *ISO-Fundamental Tolerances → Page 323*
- *Stainless Steel characteristics → Page 334*
- RoHS compliant

Information

Set collars GN 705 essentially comply with the designs of DIN 705 which has been re-issued in April 2007.

The official standard sheet also lists the sizes d_1 = 2 / 2,5 / 3 / 3,5 / 4 / 4,5 / 85 / 90 / 100 / 110 / 120 / 125 / 125 / 140 / 150 / 160 / 180 and 200, although it does not show a whole series of the intermediate sizes listed in the above table.

Also, the official standard sheet still lists the Types B and C for fixing the set collars with transverse pin, but not Type E.

Steel-Set collar, blackened		
1 2	1	d_1
GN 705-20-A	2	Type

Steel-Set collar, zinc plated		
1 2 3	1	d_1
GN 705-10-E-ZB	2	Type
	3	Finish

Stainless Steel-Set collar		
1 2 3	1	d_1
GN 705-10-E-NI	2	Type
	3	Material

GN 706.2 Semi-split set collars

Steel / Stainless Steel / Aluminium

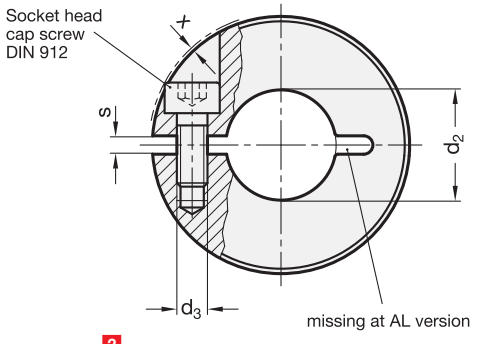

Range extended!

Rost frei Inox Stainless Steel

1 d_1	2 d_2 H10 for ST, NI, AL E8 for A4 recommended shaft tolerance h11		b ±0,2	d_3	s ST, NI, AL	s A4	x ≈ max. protrusion of cap thread
20	B 6	-	9	M 3	2,1	1,6	1,2
22	B 8	-	9	M 3	2,1	1,6	1
26	B 10	-	11	M 4	2,1	1,6	1,6
30	B 12	-	11	M 4	2,1	1,6	0,7
32	B 14	-	11	M 4	2,1	1,6	0,7
36	B 15	B 16	13	M 5	2,1	1,6	1,4
42	B 18	B 20	15	M 5	3	1,6	0,6
48	B 22	B 25	15	M 5	3	1,6	0
55	B 28	B 30	15	M 6	3	1,6	0,5
60	B 32	B 35	15	M 6	4	1,6	0,4
65	B 40	-	15	M 6	4	1,6	0,5

Specification

3

- Steel **ST**
  - Sintered Steel (Distaloy AB) black oxidised with vapor
  - Socket head cap screw DIN 912 Steel, blank
- Stainless Steel
  - Sintered Steel AISI 316 L **NI** Socket head cap screw DIN 912-A2
  - Turned version AISI 316 **A4** weldable Socket head cap screw DIN 912-A4
- Aluminium **AL**
  - ground
  - Socket head cap screw DIN 912-A2
- *ISO-Fundamental Tolerances → Page 323*
- *Stainless Steel characteristics → Page 334*
- RoHS compliant

Information

Semi-split set collars GN 706.2 can safely and simply be assembled i. e. with high clamping force without damaging the surface of the shaft.

For size d_1 = 20 to 36 d_3 is a through hole; starting from d_1 = 42 d_3 is a threaded blind bore.

These set collars not only serve as an end stop, but they can also be used for fixing or triggering other components such as end limit switches.

Steel-Semi-split set collar 1 2 3 GN 706.2-36-B16-ST		
	1	d_1
	2	d_2
	3	Material

Stainless Steel-Semi-split set collar 1 2 3 GN 706.2-55-B28-NI		
	1	d_1
	2	d_2
	3	Material

GN 707.2 Split set collars

Steel / Stainless Steel / Aluminium

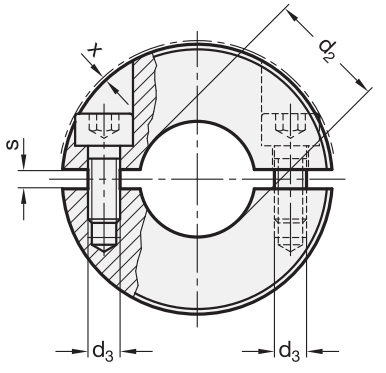

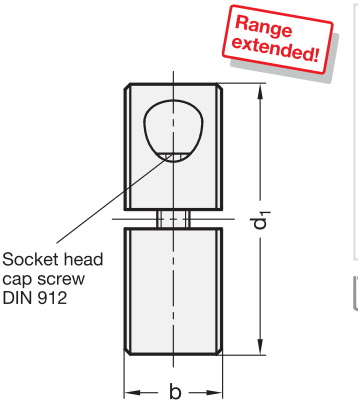

Inox Stainless Steel

1 d_1	2 d_2 H10 for ST, NI, AL E8 for A4 recommended shaft tolerance h11		b ±0,2	d_3	s ST, NI, AL	s A4	$x \approx$ max. protrusion of cap thread
20	B 6	-	9	M 3	2,1	1,6	1,2
22	B 8	-	9	M 3	2,1	1,6	1
26	B 10	-	11	M 4	2,1	1,6	1,6
30	B 12	-	11	M 4	2,1	1,6	0,7
32	B 14	-	11	M 4	2,1	1,6	0,7
36	B 15	B 16	13	M 5	2,1	1,6	1,4
42	B 18	B 20	15	M 5	3	1,6	0,6
48	B 22	B 25	15	M 5	3	1,6	0
55	B 28	B 30	15	M 6	3	1,6	0,5
60	B 32	B 35	15	M 6	4	1,6	0,4
65	B 40	-	15	M 6	4	1,6	0,5

Specification

3

- Steel **ST**
  - Sintered Steel (Distaloy AB) black oxidised with vapor
  - Socket head cap screw DIN 912 Steel, blank
- Stainless Steel
  - Sintered Steel AISI 316 L **NI** Socket head cap screw DIN 912-A2
  - Turned version AISI 316 **A4** weldable Socket head cap screw DIN 912-A4
- Aluminium **AL**
  - ground
  - Socket head cap screw DIN 912-A2
- *ISO-Fundamental Tolerances* → *Page 323*
- *Stainless Steel characteristics* → *Page 334*
- RoHS compliant

Information

Split set collars GN 707.2 are used when the latter cannot be slipped over a shaft.

For size d_1 = 20 to 36 d_3 is a through hole; starting from d_1 = 42 d_3 is a threaded blind bore.

These set collars not only serve as an end stop, but they can also be used for fixing or triggering other components such as end limit switches.

Steel-Split set collar 1 2 3 GN 707.2-65-B40-ST		
	1	d_1
	2	d_2
	3	Material

Stainless Steel-Split set collar 1 2 3 GN 707.2-22-B8-NI		
	1	d_1
	2	d_2
	3	Material

Semi-split set collars

with adjustable hand lever

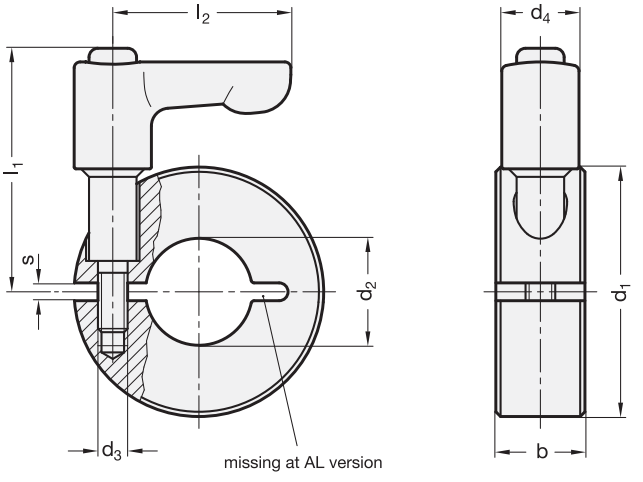

Inox Stainless Steel

1 d1	2 d2 H10 recommended shaft tolerance h11		b ±0,2	d3	d4	l1	l2	s
32	B 14	-	11	M 4	13	37	30	2,1
36	B 15	B 16	13	M 5	13	38,5	30	2,1
42	B 18	B 20	15	M 5	13	41	30	3
48	B 22	B 25	15	M 5	13	43	45	3
55	B 28	B 30	15	M 6	13	45	45	3
60	B 32	B 35	15	M 6	13	46,5	45	4
65	B 40	-	15	M 6	13	47,5	45	4

Specification

3

- Steel **ST**
  Sintered Steel (Distaloy AB)
  black oxidised with vapor
- Stainless Steel (Sintered Steel) **NI**
  AISI 316L
- Aluminium **AL**
  ground
- Ajustable hand levers
  - Zinc die casting
    plastic coated
    black RAL 9005, textured finish
  - Screw insert and retaining screw
    Stainless Steel AISI 303
- *ISO-Fundamental Tolerances* → *Page 323*
- *Stainless Steel characteristics* → *Page 334*
- RoHS compliant

Information

Semi-split set collars GN 706.4 can safely and simply be assembled i.e. with high clamping force without damaging the surface of the shaft.

For size d_1 = 32 and 36, d_3 is a through hole; starting from d_1 = 42 d_3 is a threaded blind bore.

These set collars not only serve as an end stop, but they can also be used for fixing or triggering other components such as end limit switches.

How to order

1 2 3

GN 706.4-36-B16-AL

1	d_1
2	d_2
3	Material

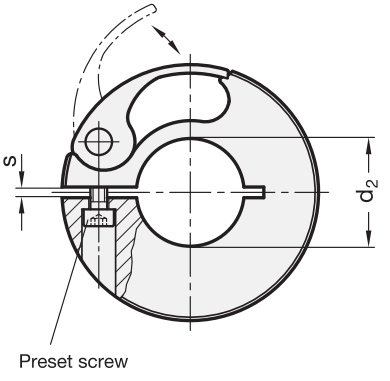

Range extended!

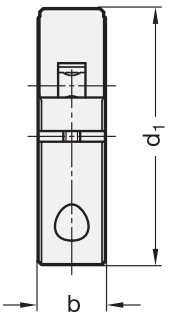

1 d_1	2 d_2 recommended shaft tolerance h8	b	s	Tightening torque of the screw in Nm ≈	Axial load in N ≈
38	B 6	10	1,5	0,5	130
38	B 8	10	1,5	0,5	130
38	B 10	10	1,5	0,5	150
38	B 12	10	1,5	0,5	160
38	B 14	10	1,5	0,5	180
38	B 15	10	1,5	0,5	220
38	B 16	10	1,5	0,5	260
50	B 20	13	1,5	0,7	310
50	B 25	13	1,5	0,7	400
50	B 28	13	1,5	0,7	430
50	B 30	13	1,5	0,7	450
75	B 32	15	1,5	1,5	460
75	B 35	15	1,5	1,5	480
75	B 38	15	1,5	1,5	530

Specification

- Ring
  Aluminium
  black anodized
- Lever
  Aluminium
  yellow anodized
- *ISO-Fundamental Tolerances → Page 323*
- RoHS compliant

Information

The force lock with the shaft is made in the GN 704 quick release set collars via an eccentric lever which allows the collars to be adjusted easily and quickly without tools. The aluminium design delivers low inertia values.

The specified tightening torque of the screw is a recommended value with which the collar clamped to a shaft (with closed eccentric lever) is capable of reaching the specified axial load capacity. The details on axial load capacity are non-binding guidance values and do not constitute a warranty of characteristics.

Keeping the friction surface of the eccentric lever slightly greased will help to prolong the useful service life.

How to order		
GN 704-38-B16	1	d_1
	2	d_2

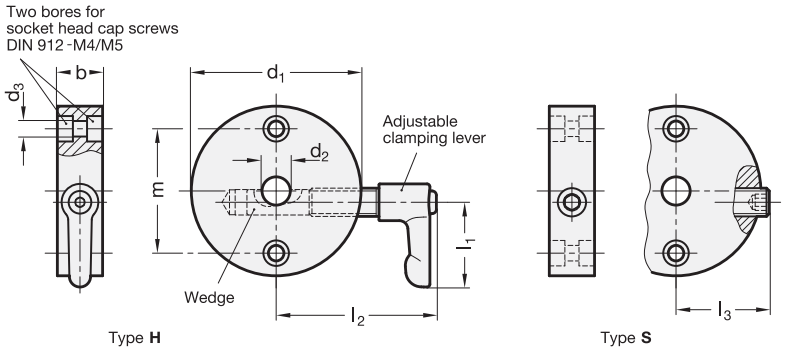

3 Type

H Clamping screw with adjustable handle

S Clamping screw with internal hexagon

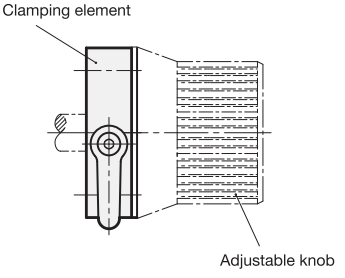

1 d_1	2 d_2 H7			d_3	b	m	l_1	l_2 max. Type H	l_3 max. Type S
40	B 8	B 10	-	4,3	16	28	30	50	27
50	B 8	B 10	B 12	5,3	16	36	30	56	32
60	B 10	B 12	-	5,3	16	44	30	61	36

Specification

4

- Aluminium
  anodized black **ELS**
- Wedge
  Brass
- Adjustable hand levers
  - black, RAL 9005, textured finish
  - with setting screw
    Stainless Steel AISI 303
- Setting screw with internal hexagon
  Stainless Steel AISI 303
- *ISO-Fundamental tolerances → Page 323*
- *Stainless Steel characteristics → Page 334*
- RoHS compliant

Information

Clamping elements GN 826 are normally used in connection with control knobs and smaller handwheels.

Spindles can so be clamped gently and easily and without much construction and installation effort. The clamping wedge stiffens the spindle, e.g., to prevent maladjustments caused by vibrations or to secure the spindle after adjustment.

This clamping element can also be used to store the spindle

The clamping element may be mounted such that the clamping lever / the clamping screw is positioned either on the left or the right hand side.

Indicator arrows which can be attached to the circumference of the clamping element are found under GN 711.1.

see also...

- *Indicator arrows GN 711.1 → Main Catalogue Page 336*

How to order

1 2 3 4

GN 826-40-B10-H-ELS

1	d_1
2	d_2
3	Type
4	Finish

Type **A** Clamp spring washer

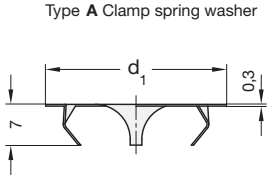

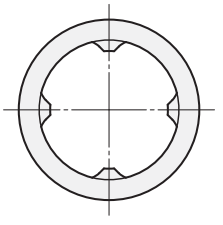

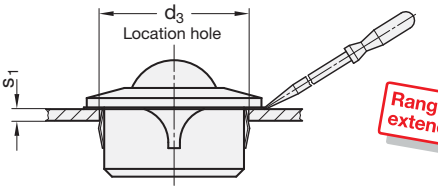

Range extended!

Inox
Stainless
Steel

2 Type

A Clamp spring washer
B Retaining ring

Type **B** Retaining ring

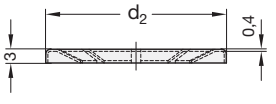

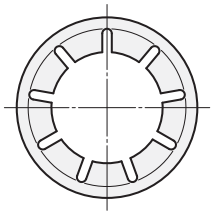

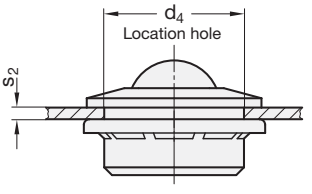

1 **d_1** Type A	1 **d_2** Type B	**d_3** Type A	**d_4** Type B Minimum dimension	**s_1** Type A	**s_2** Type B	for ball transfer units GN 509 GN 509.1 Size
-	36	-	22,2	-	optional	12
31	38	25 $^{-0,2}$	24,2	2 ... 3	optional	15
44	-	37,3 $^{-0,3}$	-	2 ... 4	-	22
55	-	46,7 $^{-0,3}$	-	2 ... 4	-	30

Specification

- Type A
  Spring steel
  Stainless Steel
- Type B
  Spring steel
  zinc plated
- RoHS compliant

Information

Clamp spring washers GN 509.3, type A allow ball transfers units to be mounted and removed from the installation side.

Retaining rings GN 509.3, type B are mounted from the back. Ball transfers units mounted this way can no longer be dismantled. No restrictions exist with respect to sheet metal thickness.

see also...
- *Ball transfer units GN 509 → Page 172*

How to order
1 2
GN 509.3-31-A

1	d_1 (d_2)
2	Type

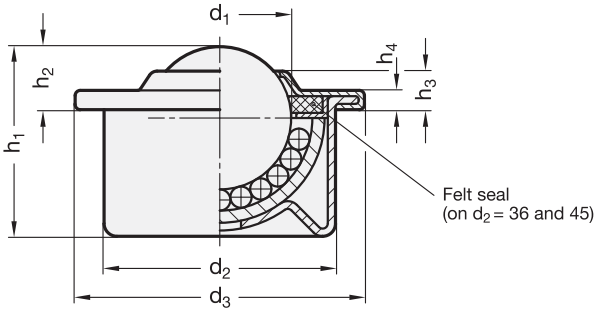

Inox
Stainless
Steel

[1]

Size	d_1 Ball	d_2	d_3	h_1 ±0,3	h_2 ±0,3	h_3 ±0,3	h_4	Load C in N Version			
								SBL	SKU	SNI	NNI
15	15,8	24 ±0,065	31	21	9,5	5	2,9	500	70	300	300
22	22,2	36 ±0,08	45	29,5	9,8	6	2,9	1200	100	900	900
30 *	30,1	45 ±0,1	55	37,8	13,8	7	3,7	2000	150	1500	-

* Not available as version NNI.

Specification

[2]

- Housing sheet steel **SBL**
  - zinc plated, blue passivated
  - Ball Steel, blank
- Housing sheet steel **SKU**
  - zinc plated, blue passivated
  - Ball Plastic (Polyacetal POM)
- Housing sheet steel **SNI**
  - zinc plated, blue passivated
  - Ball Stainless Steel AISI 440C
- Housing sheet steel **NNI**
  - Stainless Steel AISI 304
  - Ball Stainless Steel AISI 440C
- RoHS compliant

Accessory

- Spring rings GN 509.3
  (Retainers for ball transfer units)

→ *Page 171*

Information

Ball transfer units GN 509 are used on conveyer tracks. They assist a linear or rotary movement of heavy loads on a conveyer track.

see also...

- *Ball transfer units GN 509.1 (Heavy duty steel housing)*

→ *Main Catalogue Page 606*

How to order		
GN 509-15-SBL	1	**Size**
	2	**Material / Finish**

All ball operated conveyers are made up of a number of balls each located in a socket resting on a number of smaller support balls thus allowing the larger ball to rotate in any direction.

Arrangement and choice of ball size

When deciding on the size of the conveyer the following factors have to be taken into account: Weight, size, base material as well as the load to be carried.

The **max. distance between the roller balls „a2“** (on a plane surface) is arrived at by dividing the shortest edge length of the load to be conveyed by 2,5. This ensures that a load will always be supported by carrier balls thus preventing it from tipping over into an empty space.

The required **load carrying capacity** of the balls is determined by the weight of the actual load divided by three. This is arrived at from the assumption that, due to tolerances on the load carrying face and the spacing of the balls in general, only three balls will be under load at any one time.

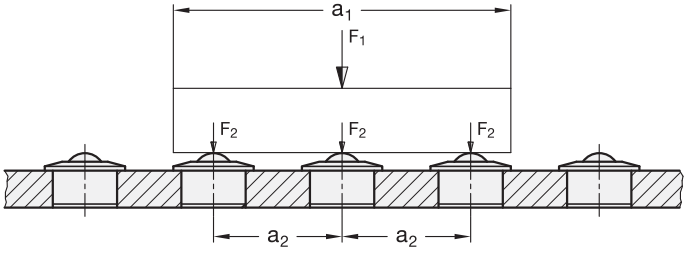

a_1 = shortest edge length of the load F_1 = Load weight

a_2 = max. distance between roller balls F_2 = Load per roller ball

$$a_2 = \frac{a_1}{2,5} \qquad F_2 = \frac{F_1}{3}$$

Speed and friction

The permissible conveying speed is 2 m/sec. With larger roller balls at speeds exceeding 1m/sec., depending on the weight being conveyed, an increased temperature would be expected.

The **friction values** of the balls at a speed of 1 m/sec. will be in the region of 0,005 µ. This value is, however, dependent on application of usage and could be subject to large variations.

In comparison of balls with sheet metal housings (GN 509) with balls in heavy duty steel housing (GN 509.1), the latter have a higher rigidity. Hence the static values of balls in steel housing can be applied.

Lubrication to prevent corrosion is recommended. The general recommendations applicable to ordinary roller bearings will be sufficient. In most applications lubrication can be ignored.

Resistance to temperature

Balls from size 36 upwards are fitted with a felt seal as protection against ingress of dirt and dust. The latter have a max temperature of 100 °C only.

Balls without the felt seal can also be used at higher operating temperatures. This, however, will lead to a reduced conveying capacity (c). The following table gives indicative values:

125 °C ./. 10 %

150 °C ./. 20 %

170 °C ./. 30 %

200 °C ./. 50 %

The max. operating temperatur for ball transfer units with plastic ball is 60 °C.

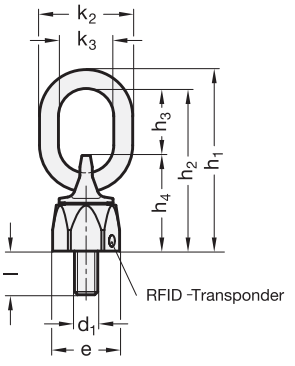

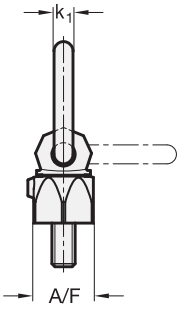

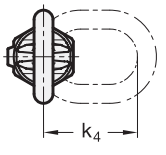

1 d_1	2 Length l	e	h_1	h_2	h_3	h_4	k_1	k_2	k_3	k_4	A/F	Tightening torque in Nm	Nominal load in t
M 8	13	30	84	76	31	45	8	45	29	44	28	10	0,30
M 10	17	36	86	78	31	47	8	45	29	44	30	10	0,45
M 12	21	42	117	107	49	58	10	55	35	65	36	10	0,60
M 16	25	48	126	113	46	67	13	64	38	65	41	30	1,30
M 20	33	62	150	137	54	83	13	61	35	77	55	70	2,00
M 24	40	81	191	173	66	107	18	76	40	94	70	150	3,50
M 30	50	99	243	221	90	131	22	94	50	126	85	225	5,00

Specification

- Chain ring
  Steel, German Material No. 1.6540
  - high-tensile tempered
  - 100% electro magnetic tensile tested to EN 1677
  - plastic coated, pink
- Eye ring
  Steel, German Material No. 1.6541
  - forged
  - high-tensile tempered
  - 100% electro magnetic tensile tested
  - plastic coated, pink
- Bearing case
  Steel 1.6541
  - forged
  - high-tensile tempered
  - 100% electro magnetic tensile tested
  - zinc plated, blue passivated
- Screw
  Steel
  Tensile strength class 10.9 (1000 N/mm²)
  Finish: Delta Tone
- RoHS compliant

Information

Load rings GN 5860 rotate running in ball bearings. The freely rotating ring allows the bolts to hold loads in any tensile direction.

The rated load-bearing capacity is shown clearly on the swivel eye bolt. It is valid for the most unfavourable case in terms of the types of load listed opposite. Load rings GN 5860 comply with Mechanical Engineering Directive 2006 / 42 / EG and are BG tested.

The integrated RFID transponder clearly marks and identifies the sling and lifting gear, e.g. during the prescribed regular inspection.

How to order		
GN 5860-M12-21 (1 2)	1	d_1
	2	Length l

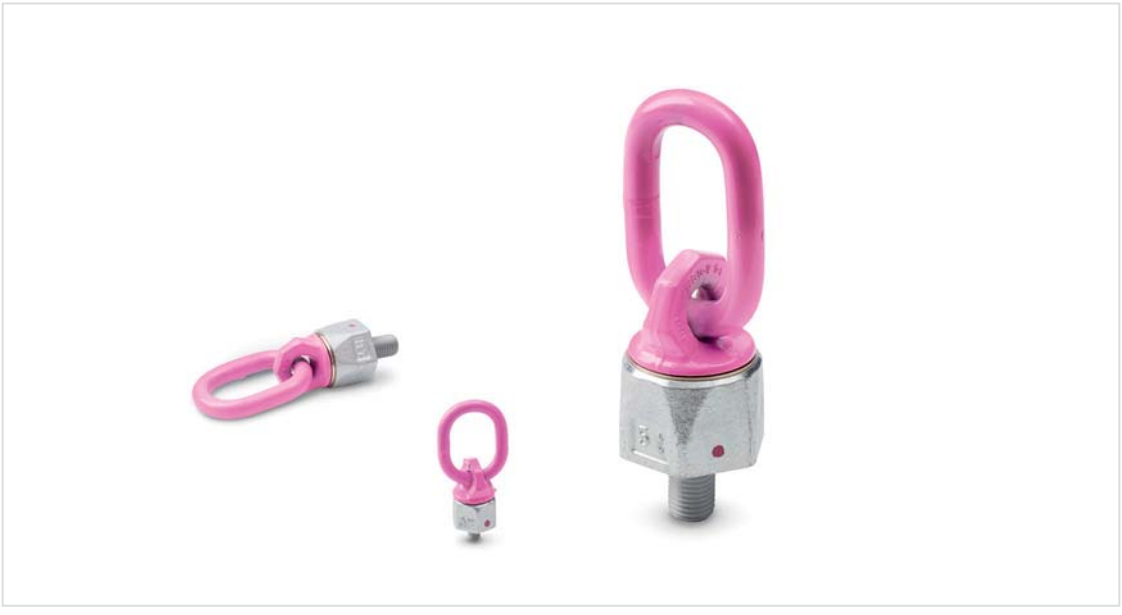

Method of mounting	G_1	G_2	2xG_1	2xG_2	G_2		G_2	G_2		G_2	
Number	1	1	2	2	2	2	2	3 and 4	3 and 4	3 and 4	
Angles of inclination	0°	90°	0°	90°	0 to 45°	45 to 60°	asymm.	0 to 45°	45 to 60°	asymm.	
Factor	1	1	2	2	1,4	1	1	2,1	1,5	1	
M 8	0,60 t	0,30 t	1,20 t	0,60 t	0,42 t	0,30 t	0,30 t	0,63 t	0,45 t	0,30 t	
M 10	0,90 t	0,45 t	1,80 t	0,90 t	0,63 t	0,45 t	0,45 t	0,94 t	0,67 t	0,45 t	
M 12	1,20 t	0,60 t	2,40 t	1,20 t	0,84 t	0,60 t	0,60 t	1,26 t	0,90 t	0,60 t	
M 16	2,60 t	1,30 t	5,20 t	2,60 t	1,81 t	1,30 t	1,30 t	2,73 t	1,95 t	1,30 t	
M 20	4,00 t	2,00 t	8,00 t	4,00 t	2,80 t	2,00 t	2,00 t	4,20 t	3,00 t	2,00 t	
M 24	7,00 t	3,50 t	14,00 t	7,00 t	4,90 t	3,50 t	3,50 t	7,35 t	5,25 t	3,50 t	
M 30	10,00 t	5,00 t	20,00 t	10,00 t	7,00 t	5,00 t	5,00 t	10,50 t	7,50 t	5,00 t	

Safety instructions

The above load capacity table shows the maximum loads in metric tonnes as factor of the load ring type and at an operating temperature range of –40 °C to +100 °C, with a safety coefficient of 4 taken into account for all values.

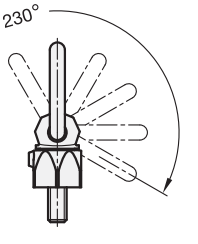

The load ring GN 5860 may be used only if it is bolted with the minimum screw-in depth which depends on the material and if the bolt contact surface is plane and fixed at a right angle to the tap hole.

If permanently mounted in place, the swivel eye bolt must rotate freely by 360° and must not rest on edges or other fixture, e.g. crane hooks. The load rings are not suitable for permanent rotary movement under load exposure.

Operating instructions with more details and specifications are included with every delivery (see also www.ganter-griff.com/service).

GN 1130

Steel / Stainless Steel

Lifting pins

self-locking

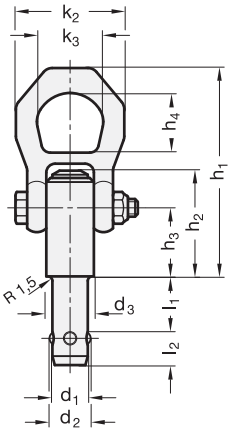

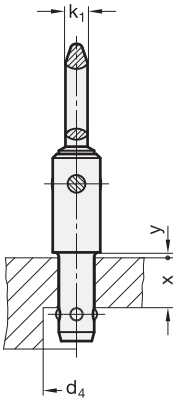

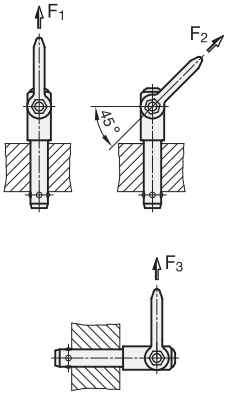

Inox Stainless Steel

1 d_1 $^{-0,04}_{-0,08}$	2 l_1 +1	d_2	d_3	d_4 min.	h_1	h_2	h_3	h_4	k_1	k_2	k_3	l_2	x min.	y	Nominal load in kN * F_1	F_2	F_3
8	10	9,35	21,5	9,9	87,5	38,5	25,7	27	9,5	49	30	8,75	5	1,5	1,5	1,2	0,5
8	15	9,35	21,5	9,9	87,5	38,5	25,7	27	9,5	49	30	8,75	5	1,5	1,5	1,2	0,5
8	25	9,35	21,5	9,9	87,5	38,5	25,7	27	9,5	49	30	8,75	10	1,5	1,5	1,2	0,5
8	35	9,35	21,5	9,9	87,5	38,5	25,7	27	9,5	49	30	8,75	20	1,5	1,5	1,2	0,5
10	15	11,7	21,5	12,2	87,5	38,5	25,7	27	9,5	49	30	10,2	5	1,5	2,7	2,4	2,1
10	25	11,7	21,5	12,2	87,5	38,5	25,7	27	9,5	49	30	10,2	15	1,5	2,7	2,4	2,1
10	35	11,7	21,5	12,2	87,5	38,5	25,7	27	9,5	49	30	10,2	25	1,5	2,7	2,4	2,1
10	50	11,7	21,5	12,2	87,5	38,5	25,7	27	9,5	49	30	10,2	40	1,5	2,7	2,4	2,1
12	15	14,2	21,5	14,7	87,5	38,5	25,7	27	9,5	49	30	11	5	1,5	3,5	3,2	2,8
12	25	14,2	21,5	14,7	87,5	38,5	25,7	27	9,5	49	30	11	10	1,5	3,5	3,2	2,8
12	35	14,2	21,5	14,7	87,5	38,5	25,7	27	9,5	49	30	11	20	1,5	3,5	3,2	2,8
12	50	14,2	21,5	14,7	87,5	38,5	25,7	27	9,5	49	30	11	35	1,5	3,5	3,2	2,8
16	25	18,6	25	19,2	92,8	47,5	31	27	9,5	49	30	15,1	10	1,5	4,8	4,5	4,1
16	50	18,6	25	19,2	92,8	47,5	31	27	9,5	49	30	15,1	15	1,5	4,8	4,5	4,1
16	75	18,6	25	19,2	92,8	47,5	31	27	9,5	49	30	15,1	35	1,5	4,8	4,5	4,1
20	50	24,5	30	25	114	55,9	36,5	32,6	11	56	36	19,7	25	1,5	10	8,5	6,5
20	75	24,5	30	25	114	55,9	36,5	32,6	11	56	36	19,7	45	1,5	10	8,5	6,5

* with 5-fold anti-fracture safety

Specification

3

- Steel **ST**
  - Stud, shackle
  - heat-treated, manganese phosphated
- Stainless Steel **NI**
  Stud AISI 630
  age-hardened
  - Shackle AISI 316Ti
- Push button
  Aluminium, red anodized
- Spring
  Stainless Steel
- RoHS compliant

Information

Lifting pins GN 1130 are carrier elements designed for fast and easy use. Pressing the red aluminium button will release the locking effect of the locking ball, allowing the load bolt to be moved in or out of the holding bore hole. The shackle rotates by at least 180°, with a safety flange fitted as a safeguard against inadvertent operation. Depending on the direction of pull, the ball load bolt may move freely by 360° in the holding bore hole.

Sling and lifting gear permanently remaining at the workpiece (e.g. load rings) is no longer necessary. Holding bore holes with d_1 H11 are sufficient in use.

For more user guidlines, see the operating instruction enclosed with every lifting pin (see also under www.ganter-griff.com/service).

How to order		
1 2 3	1	d_1
GN 1130-8-10-ST	2	l_1
	3	Material

GN 1132 Holding bushings

for lifting pins GN 1130

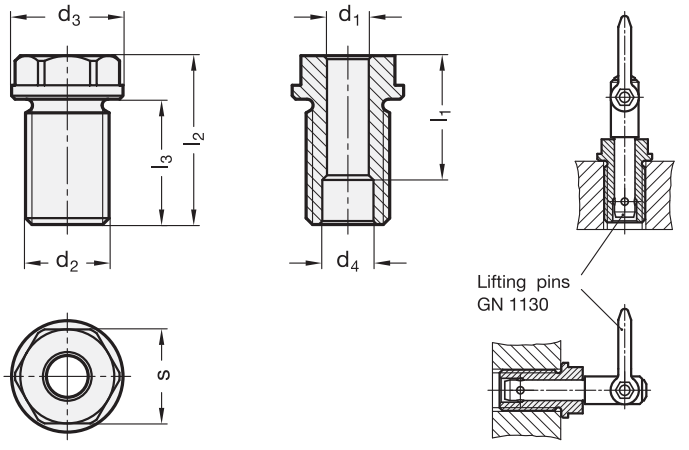

Inox
Stainless
Steel

4 Type

A with external hexagon

1 d_1	2 l_1 Nominal length	3 d_2	d_3	d_4 +0,3	l_2	l_3	s	Tightening torque in Nm
8	10	M 16 x 1,5	24	9,8	27,5	20	19	90
8	25	M 16	24	9,8	37,5	25	19	75
10	15	M 20 x 1,5	28	12,2	35,5	24	24	145
10	35	M 20	28	12,2	46	29	24	130
12	15	M 24 x 1,5	32	14,7	35,5	24	27	220
12	35	M 24	32	14,7	48,5	36	27	200
16	25	M 30 x 2	39	19,2	44	29	30	440
16	50	M 30	39	19,2	66	44	30	400
20	50	M 36 x 2	43	26	70	55	36	440

Specification

- Bushing
  Stainless Steel
  - AISI 630
  - precipitation hardened
- RoHS compliant

On request

- other threads d_2

Information

Holding bushings GN 1132 are used in connection with lifting pins GN 1130. The length l_1 of the holding bushing should be equal to length l_1 of the lifting pin in order to reach the load specification given in the table for GN 1130 at plug-in length x.

Holding bushings are intended to remain permanently at the workpiece, creating a place-saving alternative to load rings or similar or similar.

How to order

1 2 3 4

GN 1132-10-35-M20-A

1	d_1
2	l_1
3	d_2
4	Type

GN 927
Lever, Zinc die casting

GN 927.3
Lever, Steel

Clamping levers with eccentrical cam
Contact plate, Plastic

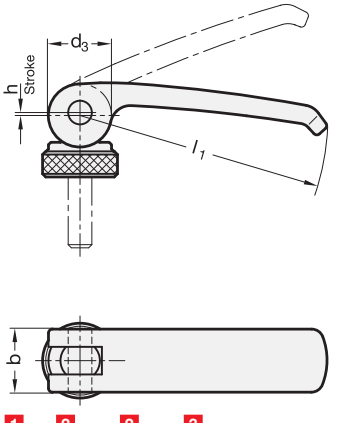

Range extended!

Type A

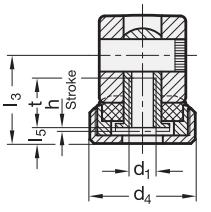

Type B

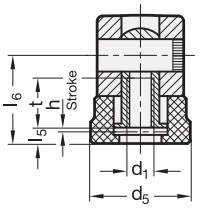

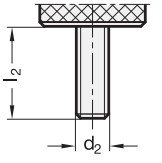

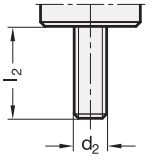

Inch sizes available

iF product design award

4 Type

A Plastic contact plate with setting nut

B Plastic contact plate without setting nut

1	2	2	3																		
l_1	d_1	d_2	l_2 in clamping position								b	d_3	d_4	d_5	h Stroke at 90° lever movement	l_3 in clamping position min.	l_3 max.	l_4 Adjustable range	l_5 in clamping position	l_6 in clamping position	t useable thread length
63	M 5	M 5	16	20	25	30	35	40	50	16	16	19	18,5	0,75	16,3	18,8	2,5	3	16,3	10
63	M 6	M 6	16	20	25	30	35	40	50	16	16	19	18,5	0,75	16,3	18,8	2,5	3	16,3	10
82	M 6	M 6	20	25	30	35	40	50	60	20	20	25	22,5	1	19,5	22,5	3	3,7	19,5	12
82	M 8	M 8	20	25	30	35	40	50	60	20	20	25	22,5	1	19,5	22,5	3	3,7	19,5	12
101	M 8	M 8	20	25	30	35	40	50	60	25	26	30	27	1,5	25,3	29,3	4	4,8	25,3	15
101	M 10	M 10	20	25	30	35	40	50	60	25	26	30	27	1,5	25,3	29,3	4	4,8	25,3	15

Specification

- **GN 927**
  Lever
  - Zinc die-cast
  - plastic coated
    (abrasion proof epoxy resin)
    black, RAL 9005 ● B
    orange, RAL 2004 ● O
    red, RAL 3000 ● R
    silver, RAL 9006 ● S
- **GN 927.3**
  Lever
  Steel (precision casting)
  zinc plated, blue passivated

This information applies to both standards:

- Axis, lag nut / screw
  setting nut / screw
  Steel
  zinc plated, blue passivated
- Contact plates
  Plastic, glass fibre reinforced
  - Type A: Polyacetal (POM)
  - Type B: Polyamide (PA)
- *Plastic characteristics → Page 331*
- RoHS compliant

Information

Clamping levers with eccentrical cam GN 927 / GN 927.3 are used for rapid clamping and releasing. Hereby, contrary to a clamping operation via a thread, these levers permit a **torque-free** clamping.

The lever has been designed to ensure that its movement cannot exceed the max. clamping force.

There are no loose components since they are all assembled and mounted in their correct order.

Type A has the following benefits:

The distance between the lever cam and the clamping surface is adjustable via a fine pitch thread, allowing the clamping position to be set easily with maximum clamping force. Also, the position of the lever relative to the clamping axis can be determined.

With these clamping levers with eccentrical cam GN 927 / GN 927.3, clamping forces of up to 8 kN can be reached.

Clamping levers with eccentrical cam, with screw

1 2 3 4 5

GN 927-82-M8-25-A-B

1	l_1
2	d_2
3	l_2
4	Type
5	Colour

Clamping levers with eccentrical cam, with internal thread

1 2 4

GN 927.3-63-M6-A

1	l_1
2	d_1
4	Type

Constructional features (Type A) / Application example

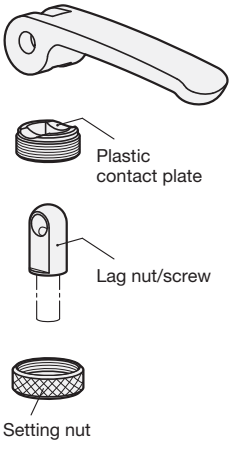

l_3 adjustable by the setting nut for optimum clamping force at the convenient lever position.

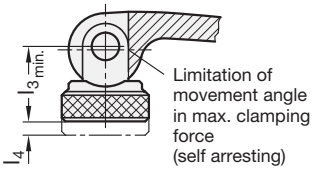

l_3 max. must not be exceeded, i.e. the red dot must not be visible.

Otherwise there is the risk that the positioning thread can no longer absorb the clamping force or may be damaged.

Clamping levers with eccentrical cam

Single parts Stainless Steel / Contact plate Plastic

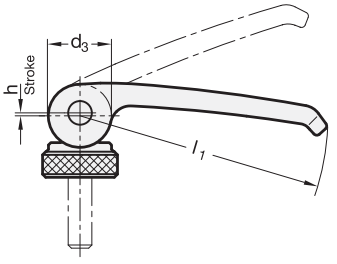

Range extended!

Type **A**

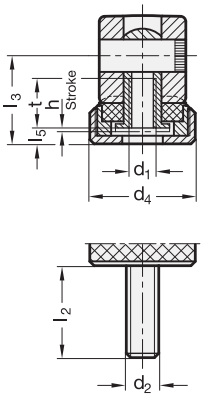

Type **B**

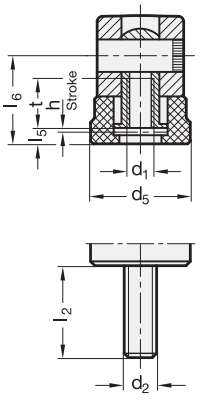

Rost frei Inox Stainless Steel

Inch sizes available

4 Type

A Plastic contact plate with setting nut

B Plastic contact plate without setting nut

1 l_1	2 d_1	2 d_2	3 l_2 in clamping position							b	d_3	d_4	d_5	h Stroke at 90° lever movement	l_3 in clamping position min.	l_3 max.	l_4 Adjustable range	l_5 in clamping position	l_6 in clamping position	t useable thread length
63	M 5	M 5	16	20	25	30	35	40	50	16	16	19	18,5	0,75	16,3	18,8	2,5	3	16,3	10
63	M 6	M 6	16	20	25	30	35	40	50	16	16	19	18,5	0,75	16,3	18,8	2,5	3	16,3	10
82	M 6	M 6	20	25	30	35	40	50	60	20	20	25	22,5	1	19,5	22,5	3	3,7	19,5	12
82	M 8	M 8	20	25	30	35	40	50	60	20	20	25	22,5	1	19,5	22,5	3	3,7	19,5	12
101	M 8	M 8	20	25	30	35	40	50	60	25	26	30	27	1,5	25,3	29,3	4	4,8	25,3	15
101	M 10	M 10	20	25	30	35	40	50	60	25	26	30	27	1,5	25,3	29,3	4	4,8	25,3	15

Specification

- **GN 927.4**
  Lever
  - Zinc die-cast
  - plastic coated
    (abrasion proof epoxy resin)
    black, RAL 9005 ● **B**
    orange, RAL 2004 ● **O**
    red, RAL 3000 ● **R**
    silver, RAL 9006 ● **S**
- **GN 927.5**
  Lever
  Stainless Steel AISI CF-8
  (precision casting)

This information applies to both standards:

- Axis, lag nut / screw
  setting nut / screw
  Stainless Steel AISI 303
- Contact plates
  Plastic, glass fibre reinforced
  - Type A: Polyacetal (POM)
  - Type B: Polyamide (PA)
- *Plastic characteristics → Page 331*
- *Stainless Steel characteristics → Page 334*
- RoHS compliant

Information

Clamping levers with eccentrical cam GN 927.4 / GN 927.5 are used for rapid clamping and releasing. Hereby, contrary to a clamping operation via a thread, these levers permit a **torque-free** clamping.

The lever has been designed to ensure that its movement cannot exceed the max. clamping force.

There are no loose components since they are all assembled and mounted in their correct order.

Type A has the following benefits:

The distance between the lever cam and the clamping surface is adjustable via a fine pitch thread, allowing the clamping position to be set easily with maximum clamping force. Also, the position of the lever relative to the clamping axis can be determined.

With these clamping levers with eccentrical cam GN 927.4 / GN 927.5, clamping forces of up to 8 kN can be reached.

Clamping levers with eccentrical cam, with internal thread

1 2 4 5

GN 927.4-63-M6-A-R

1	l_1
2	d_2
3	l_2
4	Type
5	Colour

Clamping levers with eccentrical cam, with screw

1 2 3 4

GN 927.5-82-M8-25-A

1	l_1
2	d_2
3	l_2
4	Type

Constructional features (Type A) / Application example

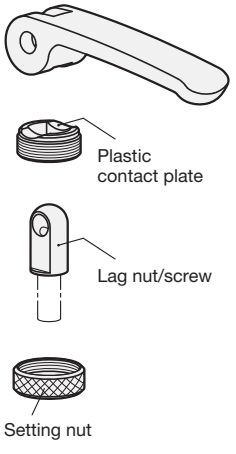

l_3 adjustable by the setting nut for optimum clamping force at the convenient lever position.

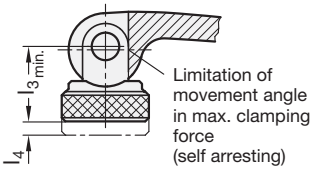

l_3 max. must not be exceeded, i.e. the red dot must not be visible.

Otherwise there is the risk that the positioning thread can no longer absorb the clamping force or may be damaged.

GN 418.2 Cam point screws

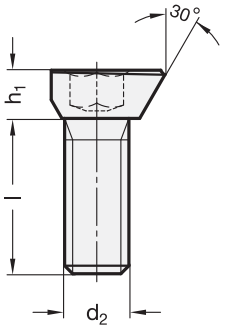

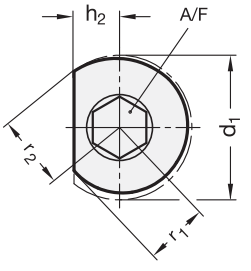

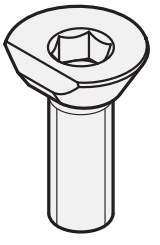

4 Type

R Clamping by clockwise rotation (d_2 = right-hand thread)

1 d_1 Nominal dimension	d_1	2 d_2	3 Length l	h_1	h_2	r_1	r_2	s_1	s_2	A/F	x ±0,2	z ±0,2	Max. tightening torque in Nm	Max. clamping force F in kN
9	9,2	M 4	8	3	3	4	4,6	1	0,6	2,5	3,5	4,2	1,5	0,09
12	11,7	M 5	10	4	3,5	5	5,7	1,16	0,7	3	4,2	5,2	2	0,1
14	14,2	M 6	12	5	4,5	6,1	7,1	1,44	1	4	5,4	6,4	5	0,3
18	18	M 8	16	6	5,5	7,7	9	1,84	1,2	5	6,6	8	22	2,7
22	22,2	M 10	20	7	6,5	9,4	11,1	2,16	1,7	6	8,3	9,8	35	4,0
26	25,8	M 12	24	9	8	11,6	13,6	2,53	1,9	8	10,1	12	45	5,4

Specification

- Steel
  - case hardened HRC 56 ±1
  - Tensile strength class 8.8 (800 N/mm²)
  - zinc plated, blue passivated
- RoHS compliant

Information

Cam point screws GN 418.2 are sturdy and compact elements, requiring a minimum of installation space and offering ultimate convenience and ease in handling.

The clamping forces F given in the table refer to the maximum permitted tightening torque and the specified screw-in depth t.

see also...

- *Cam point levers GN 418.1 → Main catalogue Page 654*

How to order		
1 2 3 4	1	d_1
GN 418.2-26-M12-24-R	2	d_2
	3	Length l
	4	Type

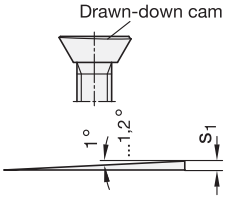

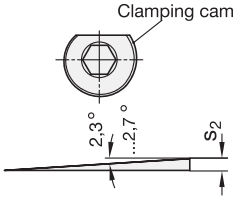

Function

The head of the cam point screw has two cams: a radial clamping cam (with additional 30° taper) and an axial draw-down cam.
The cam ensures that the clamping force is the same in any angular position. The cam is also self-locking.

Force components act on the clamping point which generate a draw-down effect and which, in addition to the friction, cause the workpiece to be pressed against a fixed stop. An additional draw-down effect is created by the thread and the 30° taper.

To ensure safe and secure clamping in every application, a right-hand version (with right-hand thread) and a left-hand version (with left-hand thread) is available.

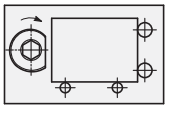

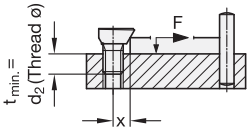

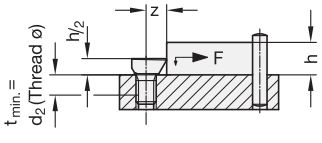

Assembly instructions

- Position the thread bore(s) as specified
- Screw the cam point screw in to the desired height and place it with its flat side facing the workpiece (note the minimum screw-in depth t)
- For clamping effect above the head taper, the minimum clamping height should be h_2
- A turn of approx. 135° is required for clamping

Application examples

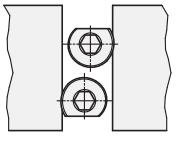

Multiple clamps in the narrowest of space

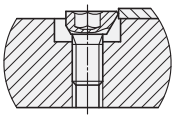

Clamping flat workpieces (sheet metal)

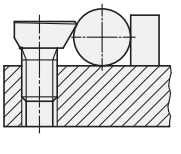

Clamping round workpieces

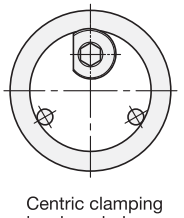

Centric clamping in a bore hole

GN 810 Vertical clamps

with horizontal base

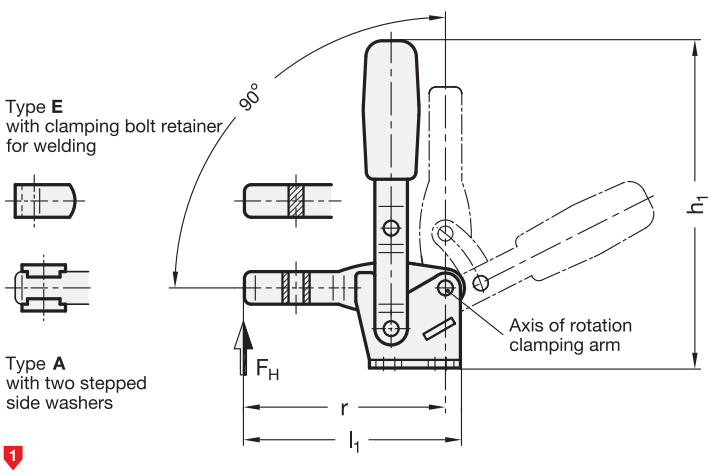

2 Type

A forked clamping arm
E solid clamping arm

1

Size	F_H in N Holding force	a ≈	b_1	b_2	b_3	d_1	d_2 ≈	h_1 ≈	h_2	h_3	h_4
75	900	20	29	34	5,2	M 5	4,5	98	20,5	11	21
130	1600	28	35	42	6,2	M 6	5,5	142	28	16	26,5
230	2200	40	43	45	8,5	M 8	6,5	168	33,5	18	31
330	2700	43	50	65	10,5	M 10	8,5	195	43	22	38
430	3000	64	58	65	12,5	M 12	8,5	247	55,5	26	45
530	4600	90	80	95	12,5	M 12	12,5	303	84,5	32	51

Size	l_1 ≈ Type A	l_1 ≈ Type E	l_2 ≈	l_3 max.	m_1	m_2	m_3	m_4	r ≈	s_1	s_2
75	66,5	67	31,5	41	15	16	24	24	62,5	2	4
130	85	86	42	54	12,5	19	27	29	79,5	2,5	5
230	110,5	112	58	73	19	20	32	32	104	3	6
330	129	130,5	66	86	29	32	46	45	122	3,5	7
430	164	166	88	114	32	32	45	45	156	4	10
530	223	225	125	152	50	51	70	70	212	7	10

Specification

- Parts in sheet metal
  Case hardening steel C10
  zinc plated, blue passivated
- Bearing pins tempered
- Bearing rivets (from size 230 upwards)
  case hardened
- all moving parts
  lubricated with special grease
- solid moulded plastic handle sleeve
  red, oil resistant
- RoHS compliant

Accessory

- Clamping bolts → *Main Catalogue Page 765*
- Holders for clamping bolts GN 809
  (for type E) → *Main Catalogue Page 770*
- Holders for clamping bolts GN 801
  (for type A) → *Main Catalogue Page 771*

Information

Stepped side washers respectively clamping bolt retainers are included.

see also...

- *General information to toggle clamps → Main Catalogue Page 676*
- *Stainless Steel-Vertical clamps GN 810 → Page 186*
- *Vertical clamps GN 910 („Longlife“) → Page 192*

How to order		
GN 810-70-E (1 2)	1	Size
	2	Type

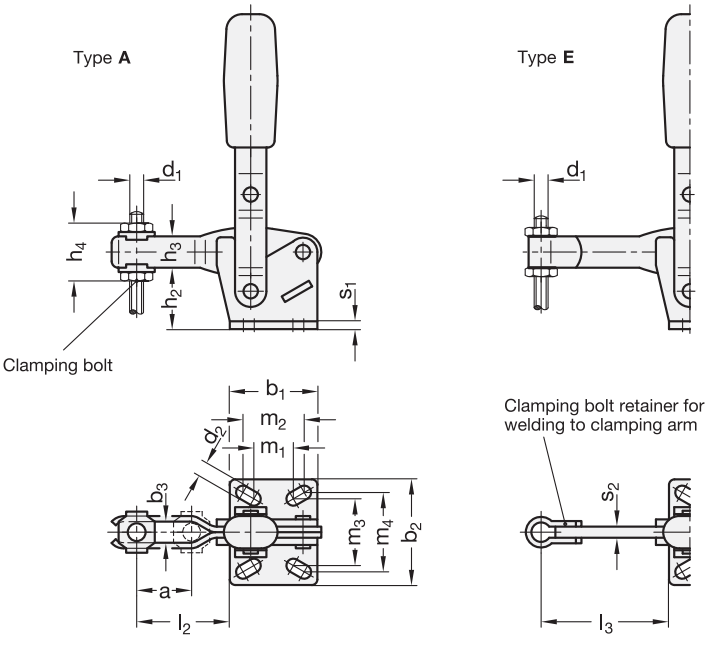
Type A
Type E
d1
h4
h3
h2
s1
Clamping bolt
b1
m2
d2
m1
b3
m3
m4
b2
a
l2
Clamping bolt retainer for welding to clamping arm
s2
l3

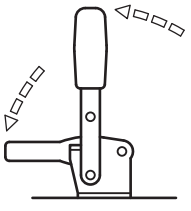

GN 810 Stainless Steel-Vertical clamps

with horizontal base

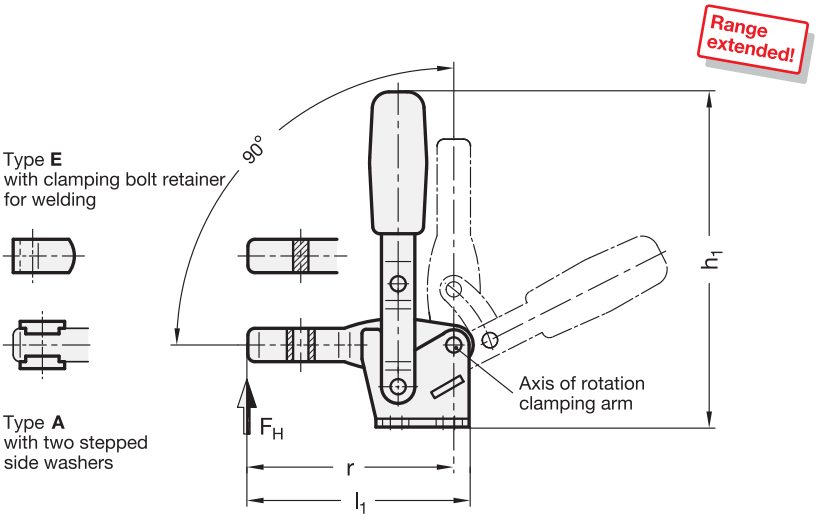

Rost frei Inox Stainless Steel

2 Type

A forked clamping arm
E solid clamping arm

1

Size	F_H in N Holding force	a ≈	b_1	b_2	b_3	d_1	d_2 ≈	h_1 ≈	h_2	h_3	h_4
75	900	20	29	34	5,2	M 5	4,5	98	20,5	11	21
130	1600	28	35	42	6,2	M 6	5,5	142	28	16	26,5
230	2200	40	43	45	8,5	M 8	6,5	168	33,5	18	31

Size	l_1 ≈ Type A	l_1 ≈ Type E	l_2 ≈	l_3 max.	m_1	m_2	m_3	m_4	r ≈	s_1	s_2
75	66,5	67	31,5	41	15	16	24	24	62,5	2	4
130	85	86	42	54	12,5	19	27	29	79,5	2,5	5
230	110,5	112	58	73	19	20	32	32	104	3	6

Specification

3

- Stainless Steel AISI 304 **NI**
- all moving parts lubricated with special grease
- solid moulded plastic handle sleeve red, oil resistant
- *Stainless Steel characteristics → Page 334*
- RoHS compliant

Accessory

- Clamping bolts
  → *Main Catalogue Page 765*

Information

Stepped side washers respectively clamping bolt retainers are included.

see also...

- *General information to toggle clamps → Main Catalogue Page 676*
- *Vertical clamps GN 810 (Steel, zinc plated) → Page 184*

How to order **1 2 3**
GN 810-70-A-NI

1	Size
2	Type
3	Material

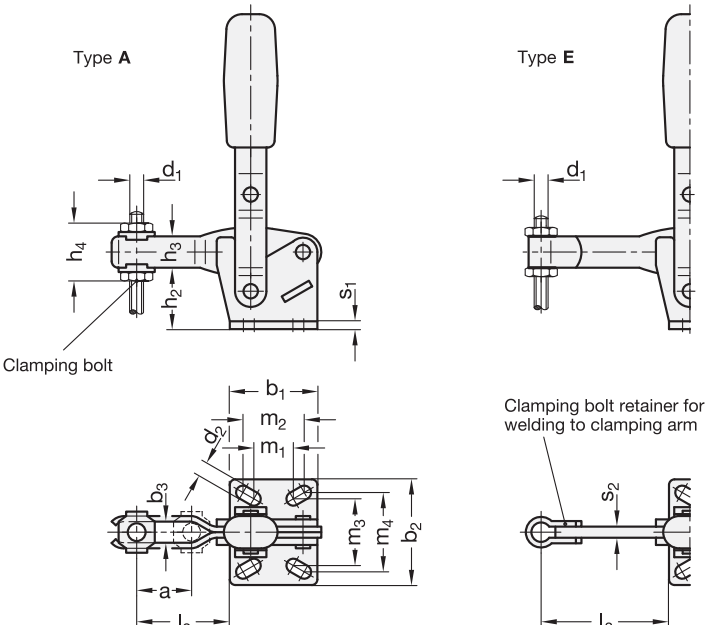
Type A
Type E
d_1
h_4
h_3
h_2
s_1
Clamping bolt
b_1
m_2
d_2
m_1
b_3
m_3
m_4
b_2
a
l_a
Clamping bolt retainer for welding to clamping arm
s_2
l_a

GN 810.1 Vertical clamps

with vertical base

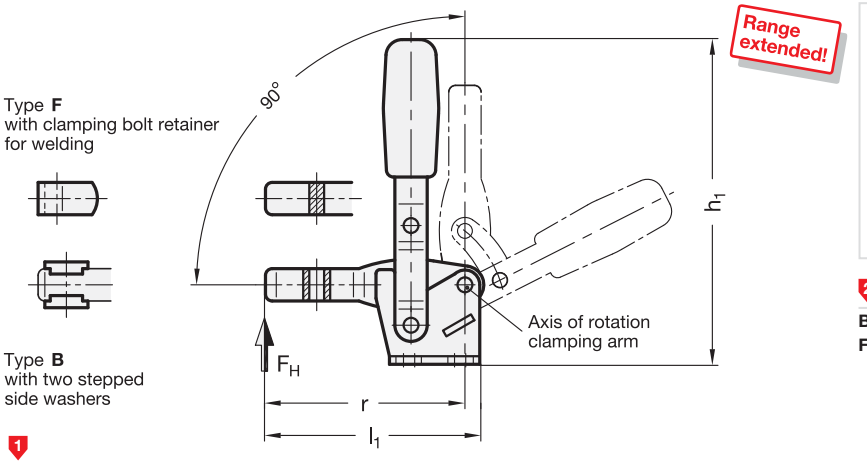

2 Type

B forked clamping arm
F solid clamping arm

1

Size	F_H in N Holding force	a ≈	b_1	b_2	b_3	b_4	d_1	d_2 ≈	h_1 ≈	h_2	h_3
75	900	20	29	8	4	5,2	M 5	4,5	109	32	11
130	1600	28	35	10	5	6,2	M 6	5,5	156	42,5	16
230	2200	40	43	12	6	8,5	M 8	6,5	183	48	18
330	2700	43	50	14	7	10,5	M 10	8,5	218	66,5	22
430	3000	64	58	18	10	12,5	M 12	8,5	268	77,5	26
530	4600	90	77	18	10	12,5	M 12	12,5	337	117,5	32

Size	h_4	l_1 Type B	l_1 Type F	l_2 ≈	l_3 max.	m_1	m_2	m_3	m_4	r ≈	s
75	21	66,5	67	31,5	41	15	16	5	5	62,5	4
130	26,5	85	86	42	54	12,5	19	6,5	7,5	79	5
230	31	110,5	112	58	73	19	20	6,5	6,5	104	6
330	38	129	130,5	66	86	28,7	32,3	10	9,5	122	7
430	45	164	166	88	114	32	32	10	10	156	10
530	51	223	225	128	155	50	51	12,5	12,5	212	10

Specification

- Parts in sheet metal
  Case hardening steel C 10
  zinc plated, blue passivated
- Bearing pins tempered
- Bearing rivets (from size 230 upwards)
  case hardened
- all moving parts
  lubricated with special grease
- solid moulded plastic handle sleeve
  red, oil resistant
- RoHS compliant

Accessory

- Clamping bolts
  → *Main Catalogue Page 765*
- Holders for clamping bolts GN 809
  (for type F) → *Main Catalogue Page 770*
- Holders for clamping bolts GN 801
  (for type B) → *Main Catalogue Page 771*

Information

Stepped side washers respectively clamping bolt retainers are included.

see also...

- *General information to toggle clamps → Main Catalogue Page 676*
- *Stainless Steel-Vertical clamps GN 810.1 → Page 190*
- *Vertical clamps GN 910.1 („Longlife“) → Page 194*

How to order

GN 810.1-125-B (1 2)

1	Size
2	Type

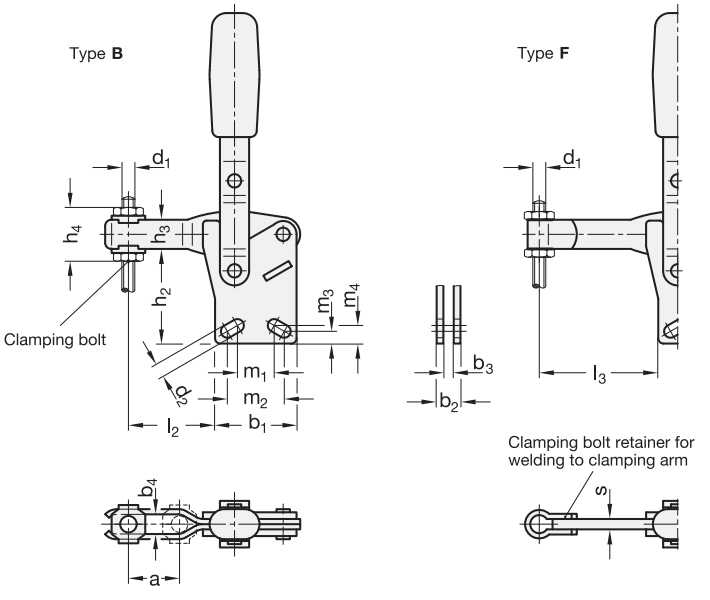
Type B
Type F
d1
h4
h3
h2
m3
m4
Clamping bolt
α
m1
m2
l2
b1
b3
b2
l3
Clamping bolt retainer for welding to clamping arm
s
b4
a

GN 810.1 Stainless Steel-Vertical clamps

with vertical base

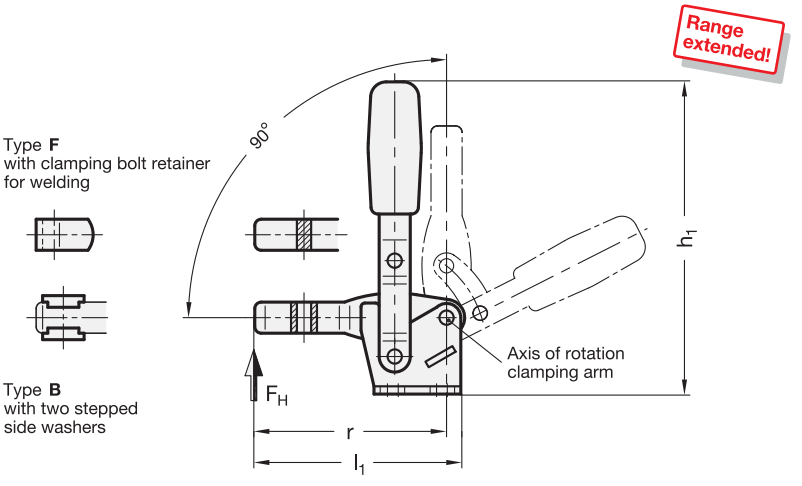

Inox
Stainless
Steel

2 Type

B forked clamping arm
F solid clamping arm

1

Size	F_H in N Holding force	a ≈	b_1	b_2	b_3	b_4	d_1	d_2 ≈	h_1 ≈	h_2	h_3
75	900	20	29	8	4	5,2	M 5	4,5	109	32	11
130	1600	28	35	10	5	6,2	M 6	5,5	156	42,5	16
230	2200	40	43	12	6	8,5	M 8	6,5	183	48	18

Size	h_4	l_1 ≈ Type B	l_1 ≈ Type F	l_2 ≈	l_3 max.	m_1	m_2	m_3	m_4	r ≈	s
75	21	66,5	67	31,5	41	15	16	5	5	62,5	4
130	26,5	85	86	42	54	12,5	19	6,5	7,5	79	5
230	31	110,5	112	58	73	19	20	6,5	6,5	104	6

Specification

3

- Stainless Steel AISI 304 **NI**
- all moving parts lubricated with special grease
- solid moulded plastic handle sleeve red, oil resistant
- *Stainless Steel characteristics → Page 334*
- RoHS compliant

Accessory

- Clamping bolts
  → *Main Catalogue Page 765*

Information

Stepped side washers respectively clamping bolt retainers are included.

see also...

- *General information to toggle clamps → Main Catalogue Page 676*
- *Vertical clamps GN 810.1 (Steel, zinc plated) → Page 188*

How to order

1 2 3

GN 810.1-125-F-NI

1	Size
2	Type
3	Material

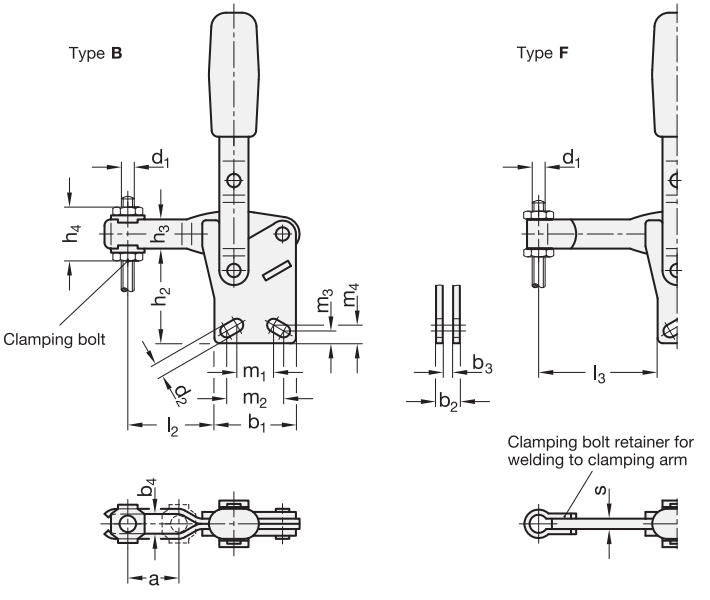
Type B
Type F
d1
h4
h3
h2
m3
m4
Clamping bolt
m1
m2
b1
l2
b3
b2
l3
Clamping bolt retainer for welding to clamping arm
s
b4
a

GN 910 Vertical clamps

heavy duty type „Longlife“

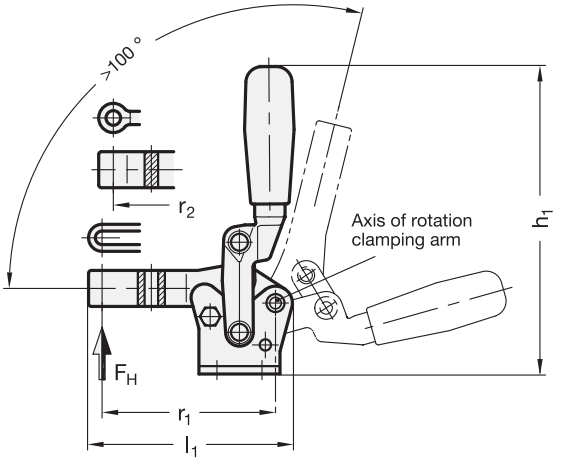

Range extended!

2 Type

A Clamping arm with slotted hole (only size 220 and 440)

E Clamping arm with bushing

1

Size	F_H in N Holding force	a	b_1	b_2	b_3	d_1	d_2	d_3	h_1	h_2	h_3
220	2200	32	36	48	6	M 6	6,5	6,5	136,5	30	16
440	4400	34	54	65	10	M 10	8,5	10,5	215	50	24
850*	8500	-	75	75	-	M 12	10,5	12,5	280	67	30
1540*	15400	-	90	100	-	M 16	12,5	16,5	330	76,5	35

Size	h_4 ≈	l_1 Type A	l_1 Type E	l_2	l_3	m_1	m_2	m_3	r_1	r_2	s_1	s_2
220	27	91	86	51	46	20	32	8	77	72	3,5	6
440	45	129,5	129,5	66	66	30	45	12	107	107	5	10
850*	-	-	161	-	72	55	55	10	-	133	6	12
1540*	-	-	203	-	92,5	65	65	12,5	-	167	8	16

* This size is fitted with a round handle at the lever arm and available only in type E.

Specification

- Clamping arm Steel
  - Precision casting
  - blackened
- Lever arm Steel
  - forged
  - blackened
- Parts in sheet metal
  Case hardening steel
  blackened
- Bearing pins and rivets Steel
  hardened and ground
- all moving parts
  lubricated with special grease
- solid moulded plastic handle sleeve
  red, oil resistant
- RoHS compliant

Information

Vertical clamps „Longlife“ GN 910 are an advance development of GN 810. The steel sheet design of the clamp and lever arms is replaced by precision or die-forged components. The remaining steel sheet parts have been reinforced, bearing bolts and bushings are toughened and ground.

These vertical clamps are therefore suitable for applications in which substantial forces occur and in which a long service life is required.

Extensive tests have shown that trouble-free function (under load) is ensured also after one million clamping cycles.

Stepped side washers are included.

see also...

- *General information to toggle clamps → Main Catalogue Page 676*
- *Vertical clamps GN 810 → Page 184*

Accessory

- Clamping bolts → *Main Catalogue Page 765*
- Holders for clamping bolts GN 801 (for type A) → *Main Catalogue Page 771*

How to order

GN 910-220-A (1 Size, 2 Type)

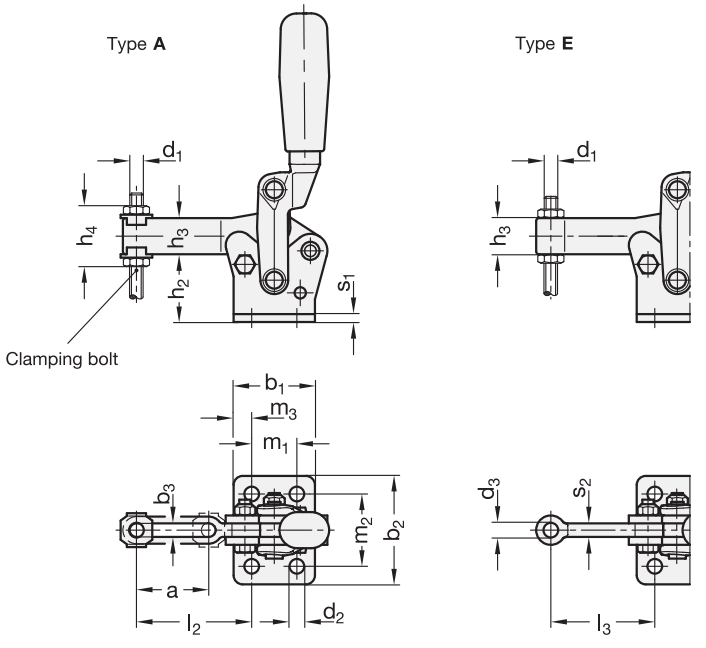
Type A
Type E
d1
h4
h3
h2
s1
Clamping bolt
b1
m3
m1
b3
m2
b2
a
l2
d2
d1
h3
d3
s2
l3

GN 910.1 Vertical clamps

heavy duty type „Longlife“

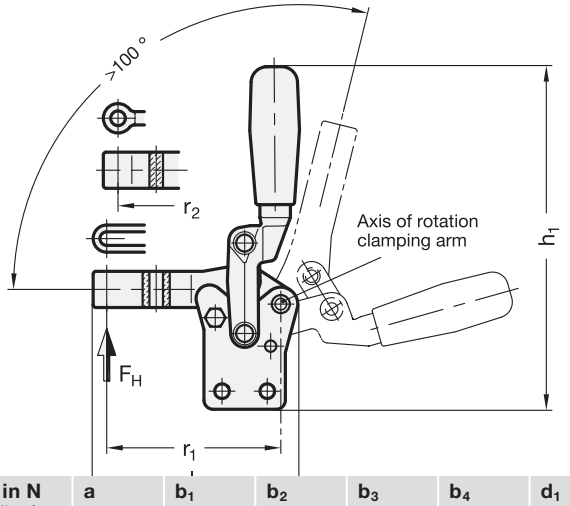

Range extended!

2 Type

B Clamping arm with slotted hole (only size 220 and 440)

F Clamping arm with bushing

1

Size	F_H in N Holding force	a	b_1	b_2	b_3	b_4	d_1	d_2	d_3	h_1	h_2
220	2200	32	36	13	6	6	M 6	6,5	6,5	152	45,5
440	4400	34	54	20	10	10	M 10	8,5	10,5	235	69,5
850*	8500	-	75	24	-	12	M 12	10,5	12,5	301	88
1540*	15400	-	90	32	-	16	M 16	12,5	16,5	344	106

Size	h_3	h_4 ≈	l_1 Type B	l_1 Type F	l_2	l_3	m_1	m_2	m_3	r_1	r_2	s
220	16	27	91	86	51	46	20	8	8	77	72	6
440	24	45	129,5	129,5	66	66	30	10	12	107	107	10
850*	30	-	-	161	-	72	55	10	10	-	133	12
1540*	35	-	-	203	-	92,5	65	17,5	12,5	-	167	16

* This size is fitted with a round handle at the lever arm and available only in type F.

Specification

- Clamping arm Steel
  - Precision casting
  - blackened
- Lever arm Steel
  - forged
  - blackened
- Parts in sheet metal
  Case hardening steel
  blackened
- Bearing pins and rivets, Steel
  hardened and ground
- all moving parts
  lubricated with special grease
- solid moulded plastic handle sleeve
  red, oil resistant
- RoHS compliant

Information

Vertical clamps „Longlife“ GN 910.1 are an advance development of GN 810.1. The steel sheet design of the clamp and lever arms is replaced by precision or die-forged components. The remaining steel sheet parts have been reinforced, bearing bolts and bushings are toughened and ground.

These vertical clamps are therefore suitable for applications in which substantial forces occur and in which a long service life is required.

Extensive tests have shown that trouble-free function (under load) is ensured also after one million clamping cycles.

Stepped side washers are included.

see also...

- *General information to toggle clamps → Main Catalogue Page 676*
- *Vertical clamps GN 810.1 → Page 188*

Accessory

- Clamping bolts → *Main Catalogue Page 765*
- Holders for clamping bolts GN 801 (for type B) → *Main Catalogue Page 771*

How to order		
GN 910.1-440-F (1 2)	1	Size
	2	Type

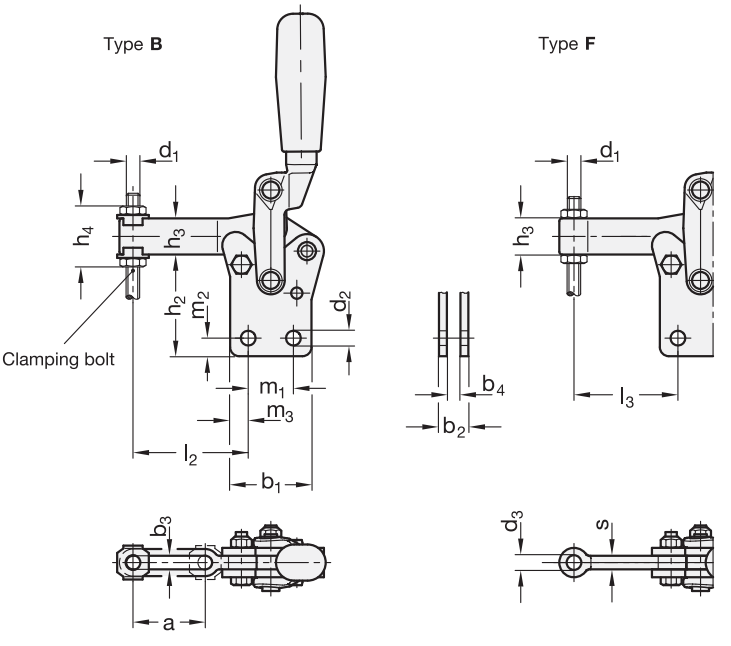
Type B
Type F
d1
h4
h3
h2
m2
d2
Clamping bolt
m1
m3
l2
b1
b3
a
b4
b2
l3
d3
s

GN 910.2 Knee lever modules

to screw-on

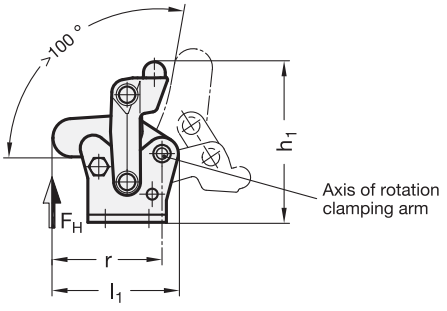

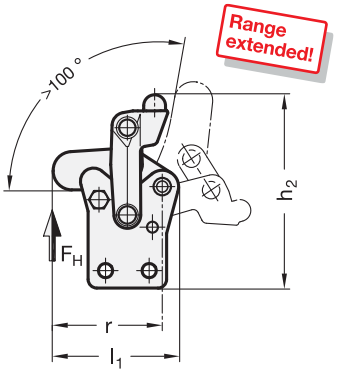

2 Type

C with horizontal base
G with vertical base

1

Size	F_H in N Holding force	b_1	b_2	b_3	b_4	d	h_1	h_2	h_3	h_4	h_5
220	2200	36	48	13	6	6,5	74	89	30	45,5	17,5
440	4400	54	65	20	10	8,5	121	140,5	50	69,5	28
850	8500	75	75	24	12	10,5	158	180	67	88	35
1540	15400	90	100	34	16	12,5	193	222	76,5	106	40

Size	l_1	l_2	l_3	m_1	m_2	m_3	m_4	r	s_1	s_2
220	57,5	24	29	20	32	8	8	50	3,5	6
440	85,5	32	42,5	30	45	12	10	73	5	10
850	115	38	52	55	55	10	10	99	6	12
1540	147,5	53	68	65	75	12,5	17,5	127,5	8	16

Specification

- Lever arm Steel
  - forged
  - blackened
- Parts in sheet metal
  Case hardening steel C10
  blackened
- Bearing pins and rivets, Steel
  hardened and ground
- all moving parts
  lubricated with special grease
- RoHS compliant

Accessory

- Handles, lever arms,
  clamping arm elongations,
  bushings, base plates

Information

The GN 910.2 knee lever modules have the same properties and attributes as the „Longlife“ GN 910 / GN 910.1 vertical clamps. The clamping arms are die-forged, the remaining steel sheet components are highly robust in design. Bearing bolts and bushings are toughened and ground.

These vertical clamps are therefore suitable for applications in which substantial forces occur and in which a long service life is required.

Extensive tests have shown that trouble-free function (under load) is ensured also after one million clamping cycles.

These knee lever modules allow the size and position of the lever and clamping arms to be adjusted to match the specific application in hand.

see also...

- *General information to toggle clamps → Main Catalogue Page 676*
- *Vertical clamps GN 910 → Page 192*
- *Vertical clamps GN 910.1 → Page 194*
- *Knee lever modules GN 910.3 (for welding) → Page 198*

How to order

1 2

GN 910.2-440-G

1	Size
2	Type

Type **C**

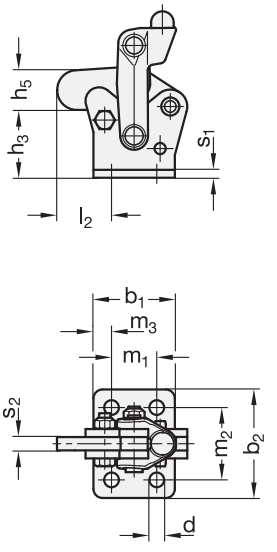

Type **G**

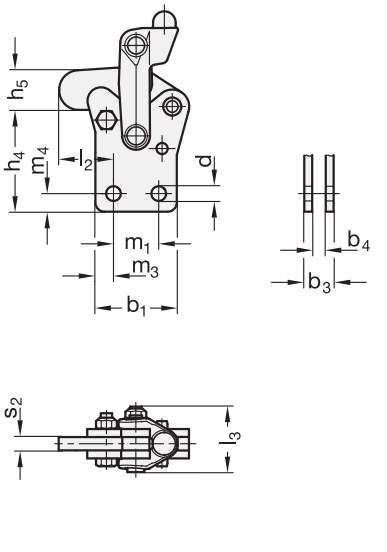

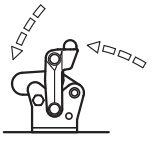

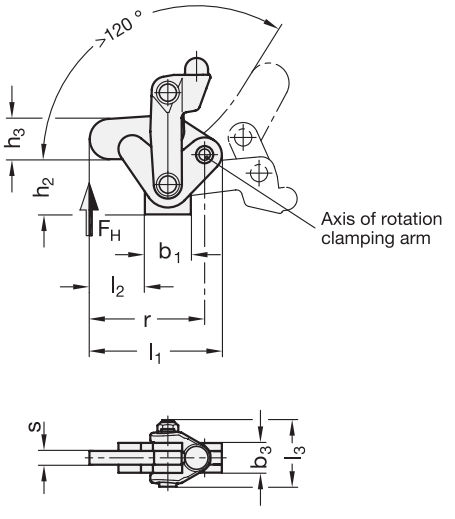

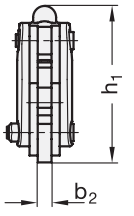

Range extended!

1

Size	F_H in N Holding force	b_1	b_2	b_3	h_1	h_2	h_3	l_1	l_2	l_3	r	s
220	2200	20	6	13	68	24	17,5	57,5	24	29	50	6
440	4400	30	10	20	113	42	28	85,5	32	42,5	73	10
850	8500	50	12	24	148	57	35	115	40,5	52	99	12
1540	15400	60	16	32	183	66,5	40,5	147,5	55,5	68	127,5	16

Specification

- Lever arm Steel
  - forged
  - blackened
- Parts in sheet metal
  Case hardening steel C10
  blackened
- Bearing pins and rivets, Steel
  hardened and ground
- all moving parts
  lubricated with special grease
- RoHS compliant

Accessory

- Handles, lever arms,
  clamping arm elongations,
  bushings, base plates → *Page 199*

Information

The GN 910.3 knee lever modules have the same properties and attributes as the „Longlife“ GN 910 / GN 910.1 vertical clamps: The clamping arms are die-forged, the remaining steel sheet components are highly robust in design. Bearing bolts and bushings are toughened and ground.

These vertical clamps are therefore suitable for applications in which substantial forces occur and in which a long service life is required.

Extensive tests have shown that trouble-free function (under load) is ensured also after one million clamping cycles.

These knee lever modules allow the size and position of the lever and clamping arms to be adjusted to match the specific application in hand. The actual module is welded on.

see also...

- *General information to toggle clamps → Main Catalogue Page 676*
- *Vertical clamps GN 910 → Page 192*
- *Vertical clamps GN 910.1 → Page 194*
- *Knee lever modules GN 910.2 (to screw-on) → Page 196*

How to order		
GN 910.3-220	1	Size

Accessory for knee lever modules

GN 910.2 and GN 910.3

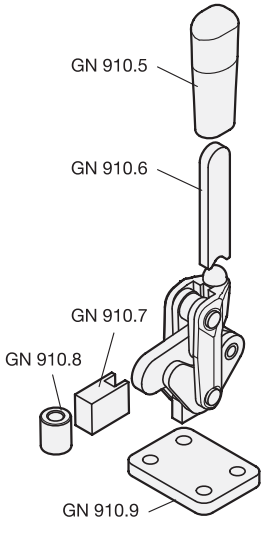

Handles

Range extended!

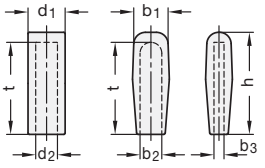

Module Size	b_1	d_1	b_2	d_2	b_3	h	t	Code No.
220	22	-	13	-	5	60	55	GN 910.5-220
440	31	-	20	-	8	86	77	GN 910.5-440
850	-	30	-	22	-	119	112	GN 910.5-850
1540	-	34	-	25	-	119	112	GN 910.5-1540

Lever arms

Range extended!

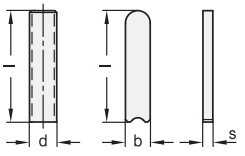

Module Size	b	d	Länge l	s	Code No.
220	13	-	60	5	GN 910.6-220
440	20	-	90	8	GN 910.6-440
850	-	22	122	-	GN 910.6-850
1540	-	25	138	-	GN 910.6-1540

Clamping arm elongations

Range extended!

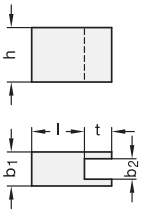

Module Size	b_1	b_2	h	Länge l	t	Code No.
220	10	6	16	15,5	6,5	GN 910.7-220
440	15	10	24	16	8	GN 910.7-440
850	20	12	30	22,1	15	GN 910.7-850
1540	25	16,2	35	23,5		GN 910.7-1540

Bushings

Range extended!

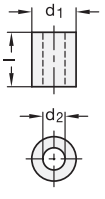

Module Size	d_1	d_2	Länge l	Code No.
220	13	6,5	16	GN 910.8-220
440	20	10,5	24	GN 910.8-440
850	24	12,5	30	GN 910.8-850
1540	32	16,5	35	GN 910.8-1540

Base plates

Range extended!

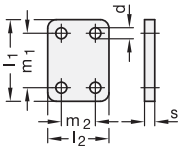

Module Size	d	l_1	l_2	m_1	m_2	s	Code No.
220	6,5	48	36	32	20	6	GN 910.9-220
440	8,5	65	54	45	30	8	GN 910.9-440
850	10,5	75	75	55	55	10	GN 910.9-850
1540	12,5	100	90	65	65	10	GN 910.9-1540

GN 820 Horizontal clamps

with horizontal base

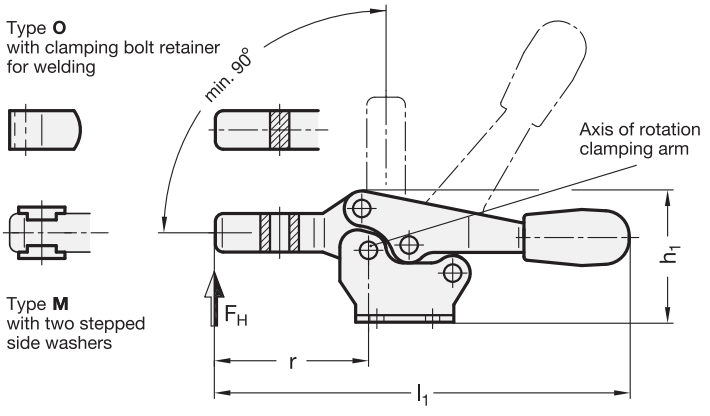

2 Type

M forked clamping arm
O solid clamping arm

1

Size	F_H in N Holding force	a ≈	b_1	b_2	b_3	d_1	d_2	h_1 ≈	h_2	h_3	h_4
25*	400	10	24	24,5	4,3	M 4	4,3	23	12	7	15
75	900	20	28	26	5,5	M 5	4,5	37	20	11	22,5
130	1000	32	36	40	6,5	M 6	5,5	51	29	14	27
230	1600	37	44	42	8,5	M 8	6,5	61,5	36,5	18	35
355	3200	58	60	56	10,4	M 10	8,5	83	50	22	43
455	6200	65	70	65	12,4	M 12	8,5	98,5	60	26	53

Size	l_1 ≈	l_2 ≈	l_3 ≈	l_4 max.	m_1	m_2	m_3	r	s_1	s_2
25	68	43	20	-	15	16	16	24,5	1,2	-
75	118	67	40	49,5	13,5	16	19	43	2	4
130	168	92	53	64	26	22,4	28,4	62	2,5	5
230	196	110	63,5	78	26	26	31,5	72	3	6
355	270	161	96	115	41	38,8	43	108,5	3,5	7
455	309	186	116	135	41,5	40	43	126	4	10

* Size 25 only available as type M.

Specification

- Parts in sheet metal
  Case hardening steel C10
  zinc plated, blue passivated
- Bearing pins tempered
- Bearing rivets (from size 355 upwards)
  case hardened
- all moving parts
  lubricated with special grease
- solid moulded plastic handle sleeve
  red, oil resistant
- RoHS compliant

Information

A special feature for the horizontal clamp GN 820 is its low profile in clamping position.

They are designed in such a way to avoid the operator's fingers being caught between the retracting clamping arm and the operating handle (safety distance).

Stepped side washers respectively clamping bolt retainers are included.

see also...

- *General information to toggle clamps → Main Catalogue Page 676*
- *Stainless Steel-Horizontal clamps GN 820 → Page 202*
- *Horizontal clamps GN 820.2 → Main Catalogue Page 708/710*

Accessory

- Clamping bolts → *Main Catalogue Page 765*
- Holders for clamping bolts GN 809
  (for type O) → *Main Catalogue Page 770*
- Holders for clamping bolts GN 801
  (for type M) → *Main Catalogue Page 771*

How to order		
GN 820-75-M (1 2)	1	Size
	2	Type

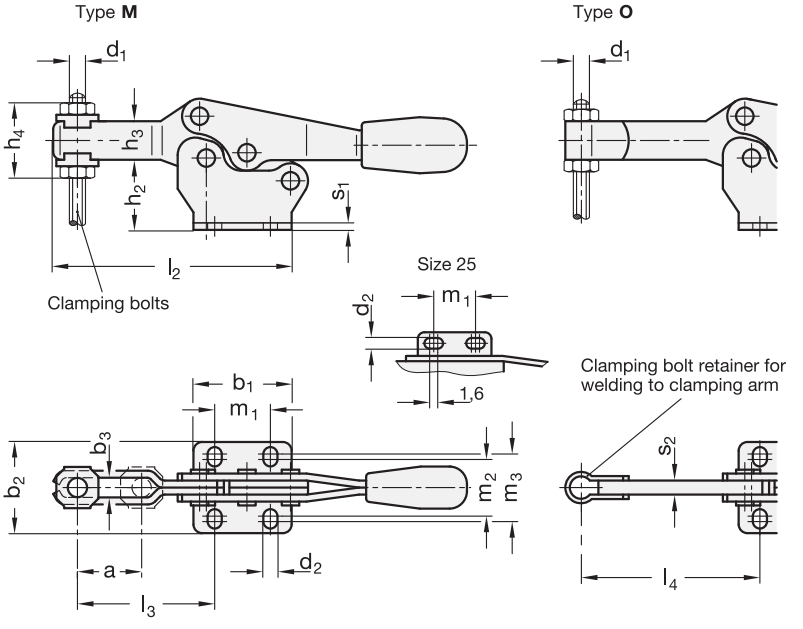
Type M
Type O
d1
h4
h3
h2
s1
l2
Clamping bolts
Size 25
d2
m1
1,6
Clamping bolt retainer for welding to clamping arm
b1
m1
b3
b2
m2
m3
s2
a
d2
l3
l4

GN 820 Stainless Steel-Horizontal clamps

with horizontal base

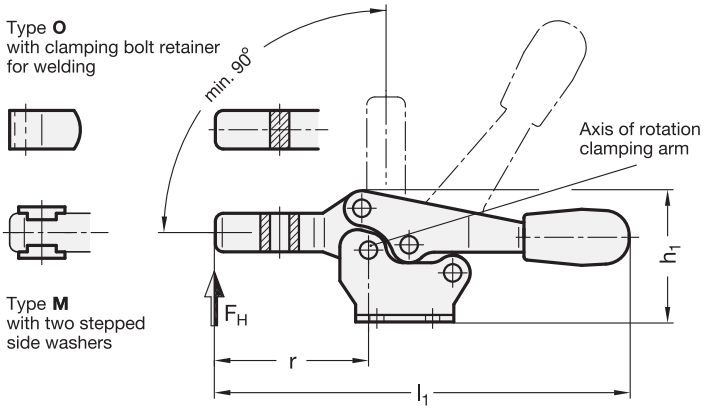

Inox Stainless Steel

2 Type

M forked clamping arm
O solid clamping arm

1

Size	F_H in N Holding force	a ≈	b_1	b_2	b_3	d_1	d_2	h_1 ≈	h_2	h_3	h_4
25*	400	10	24	24,5	4,3	M 4	4,3	23	12	7	15
75	900	20	28	26	5,5	M 5	4,5	37	20	11	22,5
130	1000	32	36	40	6,5	M 6	5,5	51	29	14	27
230	1600	37	44	42	8,5	M 8	6,5	61,5	36,5	18	35

Size	l_1 ≈	l_2 ≈	l_3 ≈	l_4 max.	m_1	m_2	m_3	r ≈	s_1	s_2
25	68	43	20	-	15	16	16	24,5	1,2	-
75	118	67	40	49,5	13,5	16	19	43	2	4
130	168	92	53	64	26	22,4	28,4	62	2,5	5
230	196	110	63,5	78	26	26	31,5	72	3	6

* Size 25 only available as type M.

Specification

3

- Stainless Steel AISI 304 **NI**
- all moving parts lubricated with special grease
- solid moulded plastic handle sleeve red, oil resistant
- *Stainless Steel characteristics → Page 334*
- RoHS compliant

Accessory

- Clamping bolts → *Main Catalogue Page 765*

Information

A special feature for the Stainless Steel-Horizontal clamp GN 820 is its low profile in clamping position.

They are designed in such a way to avoid the operator's fingers being caught between the retracting clamping arm and the operating handle (safety distance).

Stepped side washers respectively clamping bolt retainers are included.

see also...

- *General information to toggle clamps → Main Catalogue Page 676*
- *Horizontal clamps GN 820 (Steel, zinc plated) → Page 200*
- *Stainless Steel-Horizontal clamps GN 820.2 → Main Catalogue Page 710*

How to order

1 2 3

GN 820-75-M-NI

1	Size
2	Type
3	Material

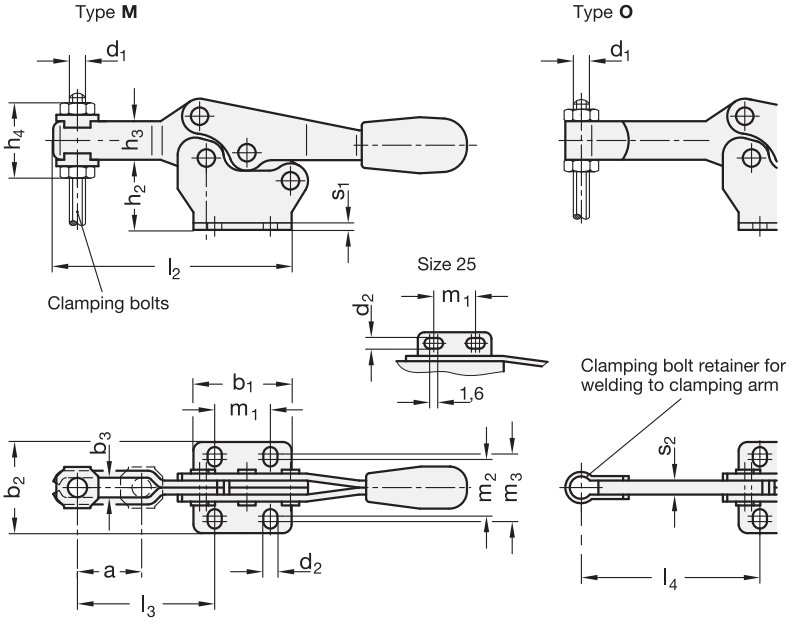
Type M
Type O
d1
h4
h3
h2
s1
l2
Clamping bolts
Size 25
d2
m1
1,6
Clamping bolt retainer for welding to clamping arm
b1
m1
b3
b2
m2
m3
s2
a
d2
l3
l4

GN 820.1 Horizontal clamps

with vertical base

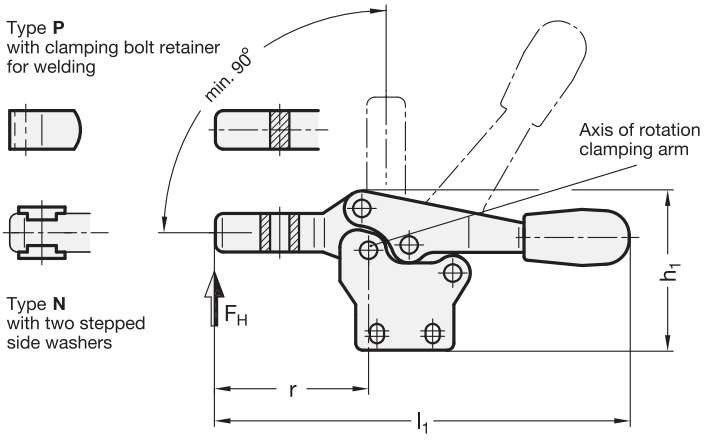

2 Type

N forked clamping arm
P solid clamping arm

1

Size	F_H in N Holding force	a ≈	b_1	b_2	b_3	b_4	d_1	d_2	h_1 ≈	h_2	h_3
75	900	20	28	8	4	5,5	M 5	4,5	45,5	27,5	11
130	1000	32	36	10	5	6,5	M 6	5,5	64	43	14
230	1700	37	44	12	6	8,5	M 8	6,5	75	50	18
355	3200	58	60	14	7	10,4	M 10	8,5	102	69	22
455	6200	65	70	18	10	12,4	M 12	8,5	119	80,5	26

Size	h_4	l_1 ≈	l_2 ≈	l_3 ≈	l_4 max.	m_1	m_2	m_3	r ≈	s
75	22,5	118	68	40	49,5	13,5	3,5	5	43	4
130	27	170	92	53	64	26	5,8	8,8	62	5
230	35	196	109	63,5	78	26	6,5	9	73	6
355	43	270	161	96	115	41	7,5	9,6	110	7
455	53	309	186	116	135	41,5	11	12,5	128	10

Specification

- Parts in sheet metal
  Case hardening steel C10
  zinc plated, blue passivated
- Bearing pins tempered
- Bearing rivets (from size 355 upwards)
  case hardened
- all moving parts
  lubricated with special grease
- solid moulded plastic handle sleeve
  red, oil resistant
- RoHS compliant

Accessory

- Clamping bolts → *Main Catalogue Page 765*
- Holders for clamping bolts GN 809
  (for type P) → *Main Catalogue Page 770*
- Holders for clamping bolts GN 801
  (for type N) → *Main Catalogue Page 771*

Information

A special feature for the horizontal clamp GN 820.1 is its low profile in clamping position.

They are designed in such a way to avoid the operator‘s fingers being caught between the retracting clamping arm and the operating handle (safety distance).

Stepped side washers respectively clamping bolt retainers are included.

see also...

- *General information to toggle clamps → Main Catalogue Page 676*
- *Stainless Steel-Horizontal clamps GN 820.1 → Page 206*
- *Horizontal clamps GN 820.2 → Page 708*

How to order		
GN 820.1-355-N (1 2)	1	Size
	2	Type

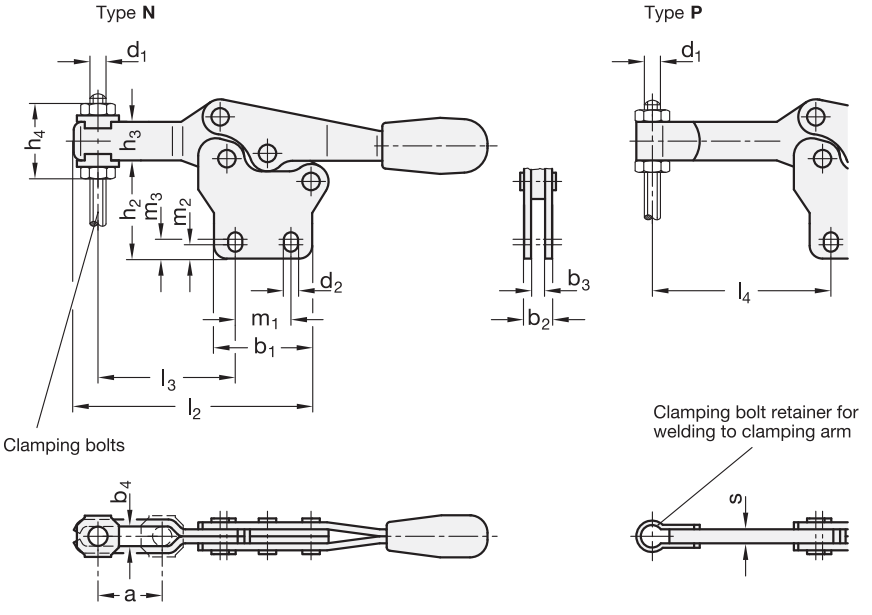
Type N
Type P
d1
h4
h3
h2
m3
m2
d2
m1
b1
l3
l2
b3
b2
l4
Clamping bolts
Clamping bolt retainer for welding to clamping arm
s
b4
a

GN 820.1 Stainless Steel-Horizontal clamps

with vertical base

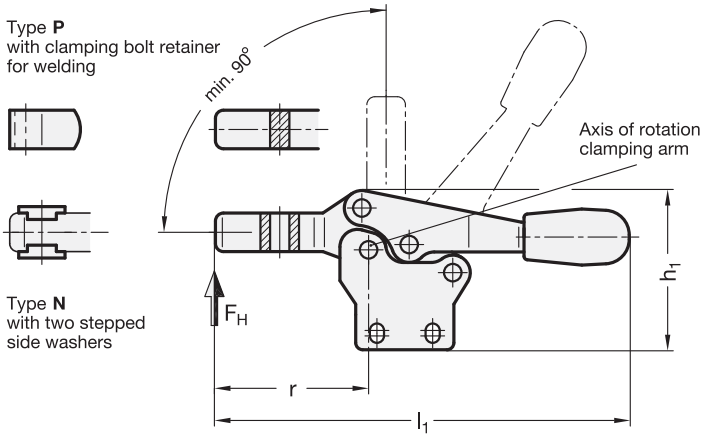

Inox
Stainless
Steel

2 Type

N forked clamping arm
P solid clamping arm

1

Size	F_H in N Holding force	a ≈	b_1	b_2	b_3	b_4	d_1	d_2	h_1 ≈	h_2	h_3
75	900	20	28	8	4	5,5	M 5	4,5	45,5	27,5	11
130	1000	32	36	10	5	6,5	M 6	5,5	64	43	14
230	1600	37	44	12	6	8,5	M 8	6,5	75	50	18

Size	h_4	l_1 ≈	l_2 ≈	l_3 ≈	l_4 max.	m_1	m_2	m_3	r ≈	s
75	22,5	118	68	40	49,5	13,5	3,5	5	43	4
130	27	170	92	53	64	26	5,8	8,8	62	5
230	35	196	109	63,5	78	26	6,5	9	73	6

Specification

3

- Stainless Steel AISI 304 **NI**
- all moving parts lubricated with special grease
- solid moulded plastic handle sleeve red, oil resistant
- *Stainless Steel characteristics* → *Page 334*
- RoHS compliant

Accessory

- Clamping bolts → *Main Catalogue Page 765*

Information

A special feature for the Stainless Steel-Horizontal clamp GN 820.1 is its low profile in clamping position.

They are designed in such a way to avoid the operator's fingers being caught between the retracting clamping arm and the operating handle (safety distance).

Stepped side washers respectively clamping bolt retainers are included.

see also...

- *General information to toggle clamps* → *Main Catalogue Page 676*
- *Horizontal clamps GN 820.1 (Steel, zinc plated)* → *Page 204*
- *Stainless Steel-Horizontal clamps GN 820.2* → *Main Catalogue Page 710*

How to order

1 2 3

GN 820.1-75-P-NI

1	Size
2	Type
3	Material

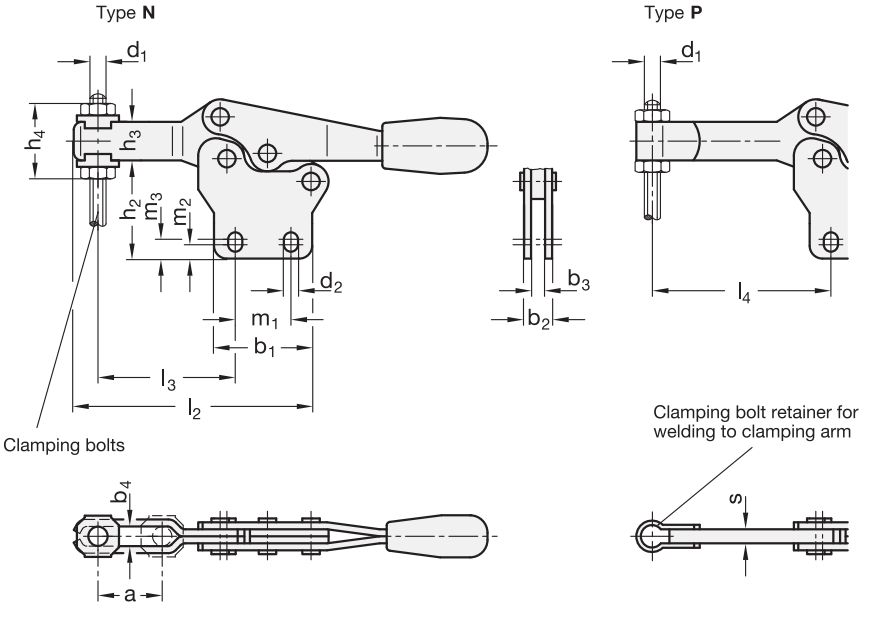
Type N
Type P
d1
h4
h3
h2
m3
m2
d2
m1
b1
l3
l2
b3
b2
l4
Clamping bolts
Clamping bolt retainer for welding to clamping arm
b4
a
s

GN 844 Plunger clamps

for push-pull clamping

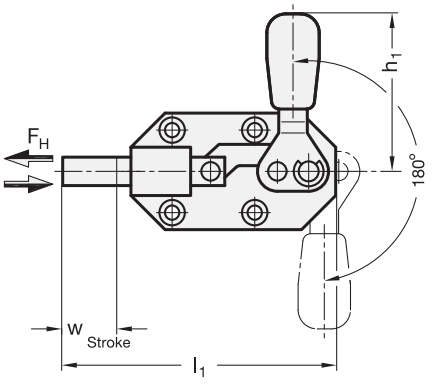

2 Type

ASD Clamping by turning handle to the left

ASS Clamping by turning handle to the right

1

Size	F_H in N Holding force	a	b	d_1	d_2	d_3	h_1 ≈	h_2	l_1 ≈
70	900	12	19,5	8,5	M 6	4,3	49	36	86
160	1300	15	25	11	M 6	5,5	79	46	117
550	4500	20	32	14	M 8	7	113	55	165

Size	l_2 ≈	l_3 ≈	m_1	m_2	m_3	m_4	s	t	w Stroke
70	77	22	26	26	13	-	6	12	20
160	107	32	36,5	33,5	11,5	-	7	12	30
550	153	42	35	41	15	41	7	16	42

Specification

- Body
  Brass: Size 70
  Steel: Size 160
  - forged
  - black lacquered
- Parts in sheet metal
  Case hardening steel C10
  zinc plated, blue passivated
- Plunger Steel St 37
  zinc plated, blue passivated
- all moving parts
  lubricated with special grease
- solid moulded plastic handle sleeve
  red, oil resistant
- RoHS compliant

Accessory

- Clamping bolts → *Main Catalogue Page 765*

Information

Plunger operated clamps GN 844 are known for their low height in all clamping positions. They can be used for very high holding forces thanks to their massive and sturdy body.

see also...

- *General information to toggle clamps → Main Catalogue Page 676*

How to order		
GN 844-70-ASS (1 2)	1	Size
	2	Type

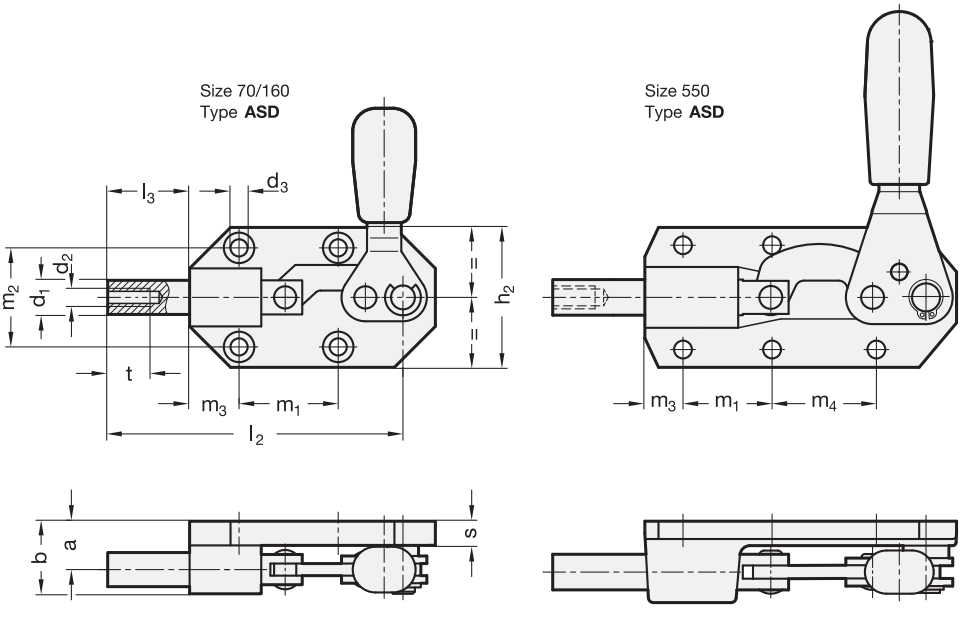

Type **ASS** is mirror image of type ASD

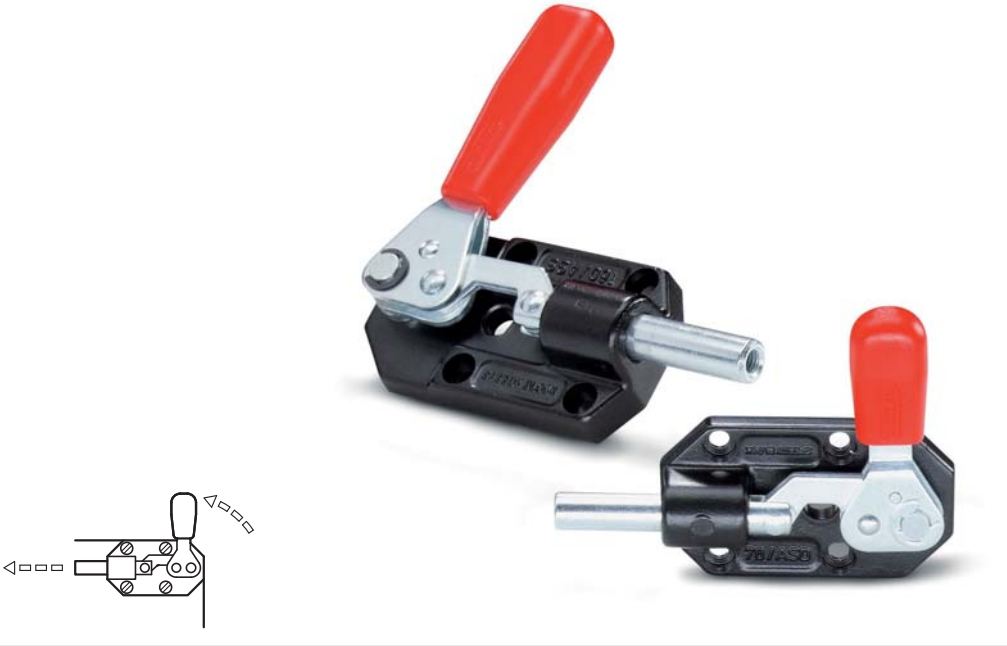

GN 852.1 Latch clamps

heavy duty type

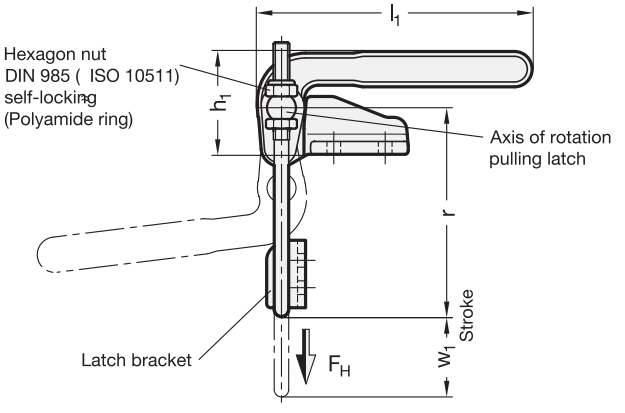

2 Type

T	with fixing holes, without pulling latch, with latch bracket
T3	with fixing holes, with pulling latch, with latch bracket
TS	for welding, without pulling latch, with latch bracket
T3S	for welding, with pulling latch, with latch bracket

1

Size	F_H in N Holding force	a	b_1	b_2	b_3	b_4	b_5	b_6	b_7	d_1	d_2	d_3
1400	12000	15	61	61	46	26	64	42	26	M 10	8,5	32,5

Size	h_1 ≈	h_2	l_1 ≈	l_2 min.	m_1	m_2	m_3	m_4	m_5	r ≈ at $w_2 = 0$	s	w_1 Stroke	w_2 ≈ Adjustable range
1400	64	24	171	44	38	14,5	32	12,5	17	108	8	50	22

Specification

- Body / operating handle
  Steel C22
  - forged
  - blackened
- Latch bracket
  Sheet steel
  blackened
- Pulling latch / bearing pins
  Steel St.37
  zinc plated, blue passivated
- all moving parts
  lubricated with special grease
- RoHS compliant

Information

The pulling latch of the latch clamps GN 852.1 is adjustable within the adjustable range.

Once in the clamping position, the pulling latch is perpendicular to the clamping arm and to the fixing level of the latch clamp.

Next to the standard dimensions of the pulling latches shown above, more design variants are on offer under GN 951.2.

see also...

- *General information to toggle clamps → Main Catalogue Page 676*
- *Pulling latches GN 951.2 → Main Catalogue Page 741*

How to order		
GN 852.1-1400-T3 (1 2)	1	Size
	2	Type

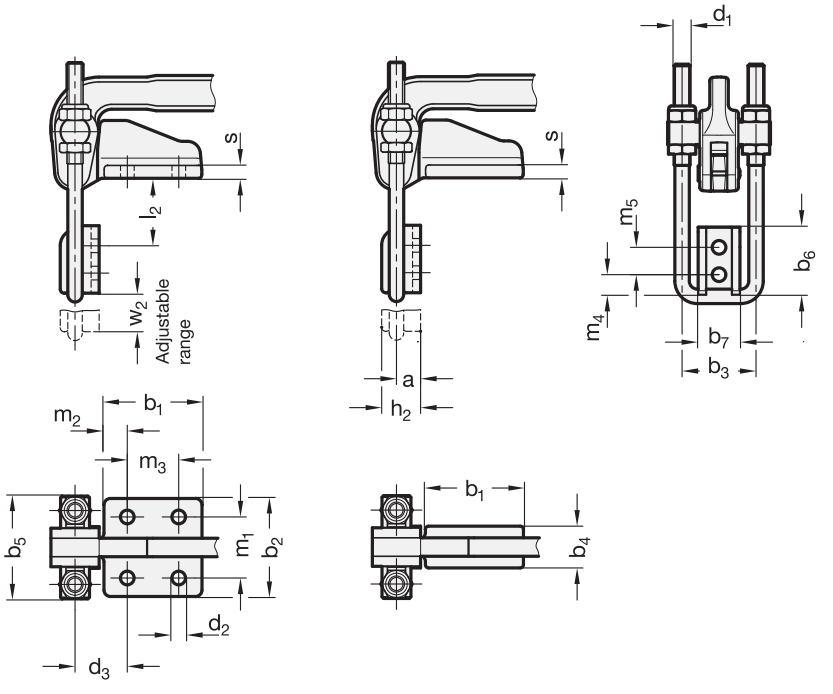
s
l2
w2
Adjustable range
s
a
h2
d1
m5
b6
m4
b7
b3
m2
b1
m3
b5
m1
b2
d2
d3
b1
b4

SPEEDY BLOCK

Hook clamps

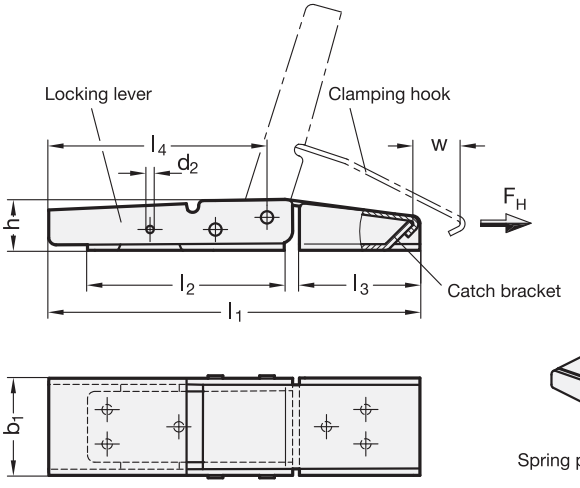

Inox
Stainless
Steel

3 Type

A without spring plug
B with spring plug

1

b_1	F_H in N Holding force	b_2	d_1	d_2	h	l_1 ≈	l_2	l_3	l_4	m_1	m_2	m_3	m_4	m_5	m_6	w ≈
15	100	9,5	3,4	1,4	8	53	25	17	31,5	9,5	13,5 +0,3	6,2	-	8,5	3	11
20	300	13	3,4	1,8	10	76	34	25	44	8	29 +0,5	8	-	22	4	9
29	600	20	4,2	2,5	15	111	56	35	67	20	38,8 +0,5	13	-	28	7	11
40	1200	29	4,2	3	20	152	80	49	89	32	57,3 +0,5	16	14	40	11	19

Specification

2

- Steel
  zinc plated, blue passivated **ST**
- Stainless Steel
  AISI 304 **NI**
- *Stainless Steel characteristics* → *Page 334*
- RoHS compliant

On request

- Spring wire plug (in d_2)
  for safety release lock

Information

The outstanding features of hook clamps GN 8330 are superior functionality and design. The integrated spring mechanism holds the locking lever and the clamping hook in the open position and allows effortless operation.

Once the dead center is exceeded, the elasticity of the sheet metal parts will cause the hook clamp to close. In the clamped position, the required drill hole spacing is m_2.

With the stroke w of the clamping hook, the elements to be connected can be pulled together during clamping.

The locking mechanism can be secured via the drill hole using spring-loaded plugs. Lead seals may also be attached via d_2.

The retaining force given in the table is a guide value for the potentially static tensile stress load acting on the hook clamp. Depending on the conditions of use (e.g. when exposed to vibrations or shock impact), the retaining force may be impaired.

How to order

1 2 3

GN 8330-20-ST-A

1	b_1
2	Material
3	Type

Hole pattern for b_1 = 15 / 20 / 29

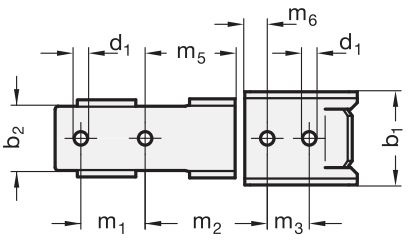

Hole pattern for b_1 = 40

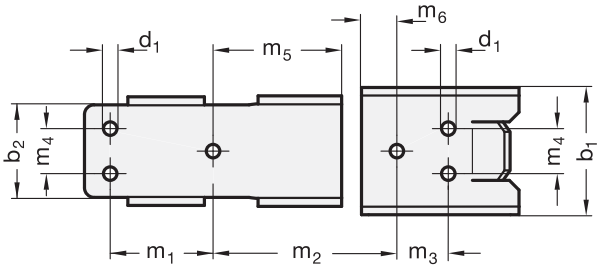

Information

Screws with low-lying flat head must be used to guarantee the proper function. The drill template also allows the assembly using blank rivets.

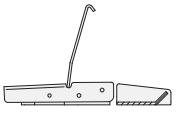

Description of function

If not operated (i.e. not in the clamping position), both the locking lever and the clamping hook are held in the position shown, kept in place by two torsion springs.

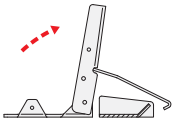

Lifting the clamping lever will swivel the clamping hook into the level of the catch bracket.

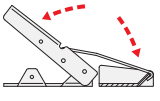

For the clamping action, the clamping hook is pressed into the catch bracket and the locking lever is at the same time turned into the starting (retaining) position.

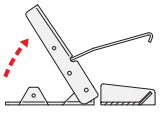

To release, simply lift the locking lever.

Levelling feet

How to read the new levelling feet standard system

New system

The Ganter product range offers an enormous variety of different levelling feet.

To make it easier for the user to select the best possible design type, Ganter has completely revised parts of their product range, adding numerous new versions and optimising the system of selection.

Starting point: the base plate

The first element of the selection system are the base plates, which are now subdivided into ten new standards, differing in terms of shape, material and mounting options. Depending on base plate selected, there are also various shapes and styles of rubber underlays available as additional versions.

The threaded stem

The second selection level is the choice of threaded stem, determined by the thread size and the nominal length, and by selecting the threaded stem type. Depending on the version, as many as 6 types of threaded stems are available.

Modular article number

Once the second selection step is done, the unique GN article number is already determined. This article number can then be used to place you order. To rule out the possibility of ordering incorrect base-threaded stem combinations, only logical pairs are shown on the clearly structured standard pages.

Base plates overview

Entirely new to the Ganter product range are two elegantly shaped, turned standard base plates made of non-rusting high-grade Stainless Steel. Designated **GN 21** or **GN 23** (the latter offered with two boreholes for safely mounting the assembly to the floor), these types are now included in the new levelling feet system.

The base plates of the new 30 and 40 standard series correspond to the tried and tested components which have previously belonged to the standards GN 340, 340.1, 340.5 and GN 340.6 / GN 341 or comparable to the GN 440 series. To visualise the system, here is an overview of the new standards:

GN 30 → base with white or black rubber underlay and zinc-plated steel plate

GN 31 → same as GN 30, but made of non-rusting Stainless Steel

GN 32 → same as GN 30, with additional fixing lug

GN 33 → same as GN 32, with non-rusting Stainless Steel plate and fixing lug

GN 40 → simple, round plate shape, zinc-plated steel

GN 41 → same as GN 40, but made of non-rusting Stainless Steel

GN 42 → same as GN 40, but with drop-shaped fixing lug

GN 43 → same as GN 42, made of non-rusting Stainless Steel.

Threaded stems overview

The threaded stems feature different techniques for height adjustment, distinguished by a type letter and described as follows:

S → external hexagon at the bottom of the threaded stem, similar to a screw head

T → flat width at the bottom of the threaded stem in the threaded zone, milled

U → same as Version T, with an additional internal hexagon at the top in the threaded stem

V → external hexagon, milled, at the top of the threaded stem

A letter “K” e.g. V → VK added to one of the above letter types indicates that an extra hexagon nut is included.

The threaded stem type **W** → is a “hygienic version” with a bottom flat width and with an adjustment sleeve with threaded nut for covering the threaded area.

Version **X** → hexagon socket with internal thread provides the option to add threaded rod, or can be directly mounted to a fixed threaded stem if no height adjustment is needed.

Stainless Steel-Levelling feet GN 21 / 23 → *Page 216*
Levelling feet GN 30 / 32 → *Page 218* / *Page 222*
Stainless Steel-Levelling feet GN 31 / 33 → *Page 220* / *Page 224*
Levelling feet GN 40 / 42 → *Page 226*
Stainless Steel-Levelling feet GN 41 / 43 → *Page 228*

Stainless Steel-Levelling feet

with turned base plate

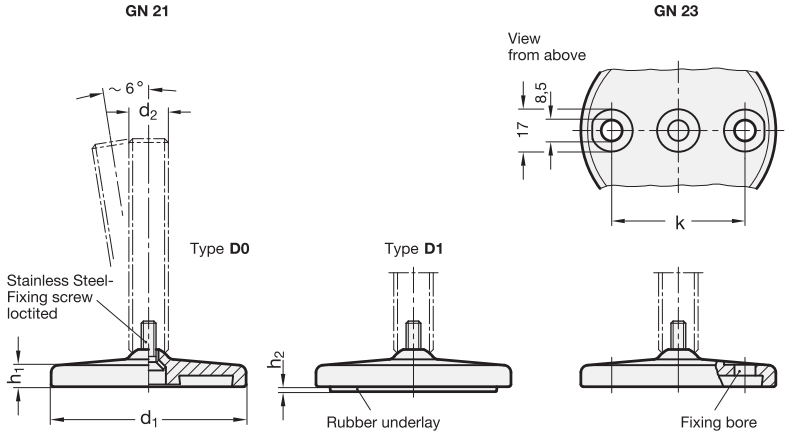

Rost frei Inox Stainless Steel

4 Type (Base plate)

D0 fine turned, without rubber underlay

D1 fine turned, with rubber underlay, inlaid, black

1 d_1	2 d_2	3 l_1 Version S / SK				l_1 Version T / TK and U / UK					3 l_2 Version V / VK					3 $l_3 \approx$ Version W				3 l_7 Ver. X	k
80	M 8	40	50	63	-	-	-	-	-	-	-	-	-	-	-	-	-	-	-	34	54,5
80	M 10	50	60	80	100	-	-	-	-	-	-	-	-	-	-	-	-	-	-	37	54,5
80	M 12	60	80	100	125	-	-	-	-	-	-	-	-	-	-	-	-	-	-	40	54,5
80	M 16	-	-	-	-	75	100	125	150	200	75	100	125	150	118	143	168	193	46	54,5
80	M 20	-	-	-	-	75	100	125	150	200	100	125	150	200	143	168	193	243	54	54,5
80	M 24	-	-	-	-	100	125	150	200	-	100	150	200	-	168	218	268	-	-	54,5
100	M 8	40	50	63	-	-	-	-	-	-	-	-	-	-	-	-	-	-	35	70,5
100	M 10	50	60	80	100	-	-	-	-	-	-	-	-	-	-	-	-	-	38	70,5
100	M 12	60	80	100	125	-	-	-	-	-	-	-	-	-	-	-	-	-	41	70,5
100	M 16	-	-	-	-	75	100	125	150	200	75	100	125	150	119	144	169	194	47	70,5
100	M 20	-	-	-	-	75	100	125	150	200	100	125	150	200	144	169	194	244	55	70,5
100	M 24	-	-	-	-	100	125	150	200	-	100	150	200	-	169	219	269	-	-	70,5
120	M 20	-	-	-	-	75	100	125	150	200	-	-	-	-	-	-	-	-	59	95,5
120	M 24	-	-	-	-	100	125	150	200	-	-	-	-	-	-	-	-	-	-	95,5
120	M 30	-	-	-	-	100	125	150	200	-	-	-	-	-	-	-	-	-	-	95,5

Specification

- Base plate
  Stainless Steel AISI 304
- Threaded stem
  Stainless Steel AISI 303
- Hexagon nut ISO 4032
  Stainless Steel AISI 304
- Rubber underlay, inlaid
  Perbunan® (NBR), 70 Shore A
- *Stainless Steel characteristics → Page 334*
- *Elastomer characteristics → Page 330*
- *Load rating information → Page 230*
- RoHS compliant

Information

Stainless Steel-Levelling feet GN 21 / GN 23 will be delivered mounted and are not removable.

see also...

- *Stainless Steel-Levelling feet GN 31 → Page 220*
- *Stainless Steel-Levelling feet GN 41 → Page 228*

St. Steel-Levelling foot without mounting bore

1 2 3 4 5
GN 21-100-M20-55-D1-X

1	d_1
2	d_2
3	l_7 (l_1, l_2, l_3)
4	Type (Base plate)
5	Version (Stem)

St. Steel-Levelling foot with mounting bore

1 2 3 4 5
GN 23-80-M10-50-D0-S

1	d_1
2	d_2
3	l_1 (l_2, l_3, l_7)
4	Type (Base plate)
5	Version (Stem)

Versions of threaded stem

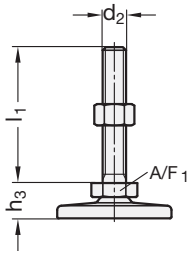

5

S without nut
SK with nut

External hexagon at the bottom
M 8, M 10, M 12

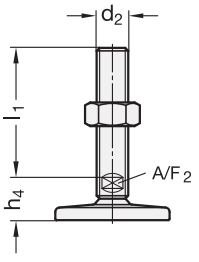

5

T without nut
TK with nut

Wrench flat at the bottom
M 16, M 20, M 24, M 30
„not dipping“ version

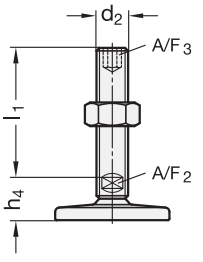

5

U without nut
UK with nut

Hexagon socket at the top
Wrench flat at the bottom
M 16, M 20, M 24, M 30

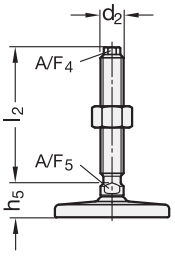

5

V without nut
VK with nut

External hexagon at the top
Wrench flat at the bottom
M 16, M 20, M 24

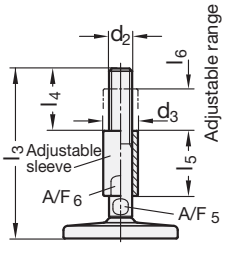

5

W with adjustable sleeve

Hygienic version
Wrench flat at the bottom
M 16, M 20, M 24

5

X with female thread

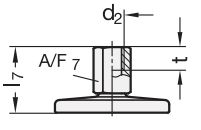

External hexagon
Female thread
M 8, M 10, M 12, M 16, M 20

d_1	d_2	d_3	h_1	h_2	h_3	h_4	h_5	l_4	l_5	l_6	A/F$_1$	A/F$_2$	A/F$_3$	A/F$_4$	A/F$_5$	A/F$_6$	A/F$_7$	t
80	M 8	-	8,5	2	19,5	-	-	-	-	-	17	-	-	-	-	-	14	8
80	M 10	-	8,5	2	19,5	-	-	-	-	-	17	-	-	-	-	-	14	10
80	M 12	-	8,5	2	19,5	-	-	-	-	-	17	-	-	-	-	-	17	12
80	M 16	24	8,5	2	-	25,5	21,5	45	45	29	-	12	8	10	12	20	22	16
80	M 20	30	8,5	2	-	27	23	56	56	36	-	15	10	13	16	24	27	20
80	M 24	35	8,5	2	-	30,5	26	67	67	42	-	19	12	17	20	30	-	-
100	M 8	-	9	3	20,5	-	-	-	-	-	17	-	-	-	-	-	14	8
100	M 10	-	9	3	20,5	-	-	-	-	-	17	-	-	-	-	-	14	10
100	M 12	-	9	3	20,5	-	-	-	-	-	17	-	-	-	-	-	17	12
100	M 16	24	9	3	-	26,5	22,5	45	45	32	-	12	8	10	12	20	22	16
100	M 20	30	9	3	-	28	24	56	56	40	-	15	10	13	16	24	27	20
100	M 24	35	9	3	-	31,5	27	67	67	48	-	19	12	17	20	30	-	-
120	M 20	-	12	3,5	-	32	-	-	-	-	-	15	10	-	-	-	27	20
120	M 24	-	12	3,5	-	35,5	-	-	-	-	-	19	12	-	-	-	-	-
120	M 30	-	12	3,5	-	39,5	-	-	-	-	-	24	12	-	-	-	-	-

GN 30 Levelling feet

Steel sheet metal, zinc plated / with Rubber underlay

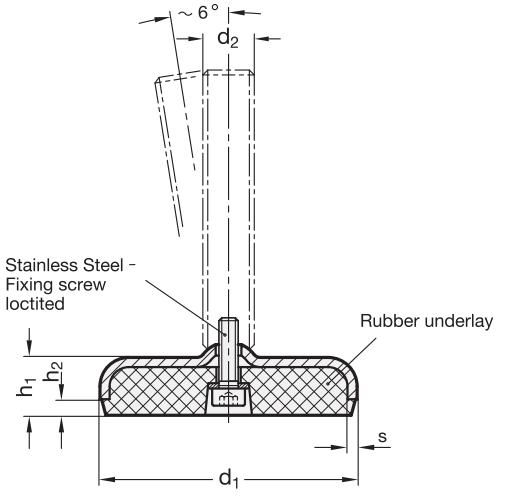

4 Type (Base plate)

A1 Steel, zinc plated rubber, inlaid black

A2 Steel, zinc plated rubber, inlaid white

1	2	3									3			
d_1	d_2	l_1 Version S / SK				Version U / UK					l_7 Version X	h_1	h_2	s
50	M 8	40	50	63	-	-	-	-	-	-	37	14,5	3,5	3
50	M 10	50	60	80	100	-	-	-	-	-	40	14,5	3,5	3
50	M 12	60	80	100	125	-	-	-	-	-	43	14,5	3,5	3
50	M 16	-	-	-	-	75	100	125	150	200	49	14,5	3,5	3
60	M 8	40	50	63	-	-	-	-	-	-	38	16	4	3
60	M 10	50	60	80	100	-	-	-	-	-	41	16	4	3
60	M 12	60	80	100	125	-	-	-	-	-	45	16	4	3
60	M 16	-	-	-	-	75	100	125	150	200	50	16	4	3
80	M 8	40	50	63	-	-	-	-	-	-	40	18	5	3
80	M 10	50	60	80	100	-	-	-	-	-	43	18	5	3
80	M 12	60	80	100	125	-	-	-	-	-	47	18	5	3
80	M 16	-	-	-	-	75	100	125	150	200	52	18	5	3
80	M 20	-	-	-	-	75	100	125	150	200	60	18	5	3
80	M 24	-	-	-	-	100	125	150	200	-	-	18	5	3
100	M 8	40	50	63	-	-	-	-	-	-	42	20	6	3
100	M 10	50	60	80	100	-	-	-	-	-	45	20	6	3
100	M 12	60	80	100	125	-	-	-	-	-	49	20	6	3
100	M 16	-	-	-	-	75	100	125	150	200	54	20	6	3
100	M 20	-	-	-	-	75	100	125	150	200	62	20	6	3
100	M 24	-	-	-	-	100	125	150	200	-	-	20	6	3
120	M 20	-	-	-	-	100	125	150	200	-	65	22	6	4
120	M 24	-	-	-	-	100	125	150	200	-	-	22	6	4
120	M 30	-	-	-	-	100	125	150	200	-	-	22	6	4

Specification

- Base plate, sheet metal
  Steel, zinc plated, blue passivated
- Threaded stem
  Steel, zinc plated, blue passivated
- Hexagon nut ISO 4032
  Steel, zinc plated, blue passivated
- Rubber underlay, inlaid
  - black: Perbunan® (NBR) 80±5 Shore A
  - white: Santoprene® (TPE) 80±5 Shore A
- Elastomer characteristics → *Page 330*
- *Load rating information* → *Page 231*
- RoHS compliant

Versions of threaded stem

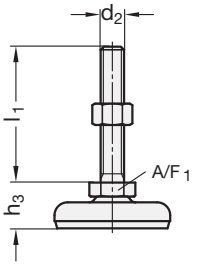

5

S without nut

SK with nut

External hexagon at the bottom
M 8, M 10, M 12

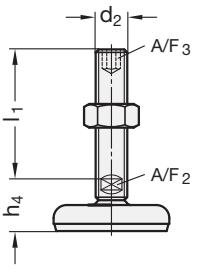

5

U without nut

UK with nut

Hexagon socket at the top
Wrench flat at the bottom
M 16, M 20, M 24, M 30

5

X with female thread

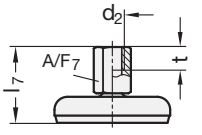

External hexagon
Female thread
M 8, M 10, M 12, M 16, M 20

d_1	d_2	h_3	h_4	A/F_1	A/F_2	A/F_3	A/F_7	t
50	M 8	23	-	17	-	-	14	8
50	M 10	23	-	17	-	-	14	10
50	M 12	23	-	17	-	-	17	12
50	M 16	-	29	-	12	8	22	16
60	M 8	24	-	17	-	-	14	8
60	M 10	24	-	17	-	-	14	10
60	M 12	24	-	17	-	-	17	12
60	M 16	-	30	-	12	8	22	16
80	M 8	26	-	17	-	-	14	8
80	M 10	26	-	17	-	-	14	10
80	M 12	26	-	17	-	-	17	12
80	M 16	-	32	-	12	8	22	16
80	M 20	-	33	-	15	10	27	20
80	M 24	-	36	-	19	12	-	-
100	M 8	28	-	17	-	-	14	8
100	M 10	28	-	17	-	-	14	10
100	M 12	28	-	17	-	-	17	12
100	M 16	-	34	-	12	8	22	16
100	M 20	-	35	-	15	10	27	20
100	M 24	-	38	-	19	12	-	-
120	M 20	-	39	-	15	10	27	20
120	M 24	-	42	-	19	12	-	-
120	M 30	-	46	-	24	12	-	-

Information

Levelling feet GN 30 will be delivered mounted and are not removable.

see also...

- *Levelling feet GN 32 (Steel, with fixing lug)* → *Page 222*
- *Stainless Steel-Levelling feet GN 31* → *Page 220*

How to order

1 2 3 4 5

GN 30-120-M30-125-A1-UK

1	d_1
2	d_2
3	l_1 (l_7)
4	Type (Base plate)
5	Version (Stem)

GN 31 Stainless Steel-Levelling feet

with Rubber underlay

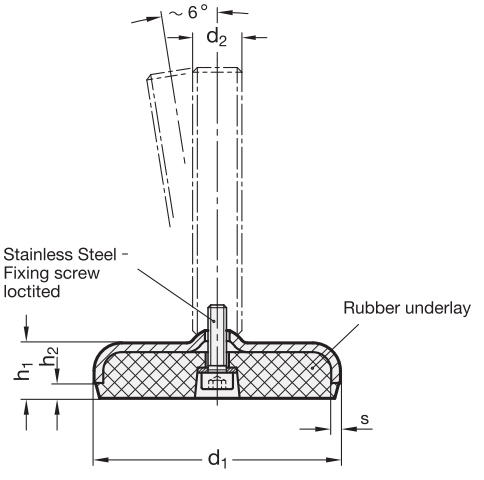

4 Type (Base plate)

- **B1** matt shot-blasted, rubber, inlaid, black
- **B2** matt shot-blasted, rubber , inlaid, white
- **B3*** matt shot-blasted, rubber, vulcanised, black
- **B4*** matt shot-blasted, rubber, vulcanised, white
- **C3*** polished, rubber, vulcanised, black
- **C4*** polished, rubber, vulcanised, white

1	2	3				3					3				3				3		
d_1	d_2	l_1 Version S / SK				Version T / TK and U / UK					l_2 Version V / VK				l_3 $^{+4.0}_{0}$ Version W				l_7 $^{+4.0}_{0}$ Vers. X	t	A/F_7
50	M 8	40	50	63	-	-	-	-	-	-	-	-	-	-	-	-	-	-	37	8	14
50	M 10	50	60	80	100	-	-	-	-	-	-	-	-	-	-	-	-	-	40	10	14
50	M 12	60	80	100	125	-	-	-	-	-	-	-	-	-	-	-	-	-	43	12	17
50	M 16	-	-	-	-	75	100	125	150	200	-	-	-	-	-	-	-	-	49	16	22
60	M 8	40	50	63	-	-	-	-	-	-	-	-	-	-	-	-	-	-	38	8	14
60	M 10	50	60	80	100	-	-	-	-	-	-	-	-	-	-	-	-	-	41	10	14
60	M 12	60	80	100	125	-	-	-	-	-	-	-	-	-	-	-	-	-	45	12	17
60	M 16	-	-	-	-	75	100	125	150	200	75	100	125	150	123	148	173	198	50	16	22
80	M 8	40	50	63	-	-	-	-	-	-	-	-	-	-	-	-	-	-	40	8	14
80	M 10	50	60	80	100	-	-	-	-	-	-	-	-	-	-	-	-	-	43	10	14
80	M 12	60	80	100	125	-	-	-	-	-	-	-	-	-	-	-	-	-	47	12	17
80	M 16	-	-	-	-	75	100	125	150	200	75	100	125	150	125	150	175	200	52	16	22
80	M 20	-	-	-	-	75	100	125	150	200	100	125	150	200	149	174	199	249	60	20	27
80	M 24	-	-	-	-	100	125	150	200	-	100	150	200	-	174	224	274	-	-	-	-
100	M 8	40	50	63	-	-	-	-	-	-	-	-	-	-	-	-	-	-	42	8	14
100	M 10	50	60	80	100	-	-	-	-	-	-	-	-	-	-	-	-	-	45	10	14
100	M 12	60	80	100	125	-	-	-	-	-	-	-	-	-	-	-	-	-	49	12	17
100	M 16	-	-	-	-	75	100	125	150	200	75	100	125	150	126	151	176	201	54	16	22
100	M 20	-	-	-	-	75	100	125	150	200	100	125	150	200	151	176	201	251	62	20	27
100	M 24	-	-	-	-	100	125	150	200	-	100	150	200	-	176	226	276	-	-	-	-
120	M 20	-	-	-	-	100	125	150	200	-	-	-	-	-	-	-	-	-	65	20	27
120	M 24	-	-	-	-	100	125	150	200	-	-	-	-	-	-	-	-	-	-	-	-
120	M 30	-	-	-	-	100	125	150	200	-	-	-	-	-	-	-	-	-	-	-	-

* only available for the dimensions d_1 = 60, 80 and 100.

Specification

- Base plate, sheet metal
  Stainless Steel AISI 304
- Threaded stem
  Stainless Steel AISI 303
- Hexagon nut ISO 4032
  Stainless Steel AISI 304
- Rubber underlay, inlaid
  - black: Perbunan® (NBR) 80±5 Shore A
  - white: Santoprene® (TPE) 80±5 Shore A
- Rubber underlay, vulcanised
  - 80±5 Shore A
  - black: Perbunan® (NBR)
  - white: Perbunan® (NBR)
- RoHS compliant

Versions of threaded stem

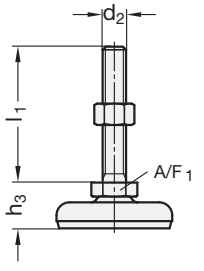

5

S without nut
SK with nut

External hexagon at the bottom
M 8, M 10, M 12

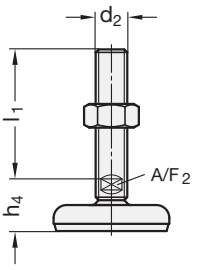

5

T without nut
TK with nut

Wrench flat at the bottom
M 16, M 20, M 24, M 30
„not dipping“ version

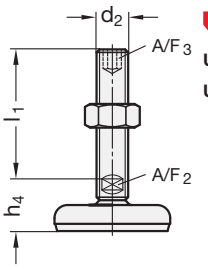

5

U without nut
UK with nut

Hexagon socket at the top
Wrench flat at the bottom
M 16, M 20, M 24, M 30

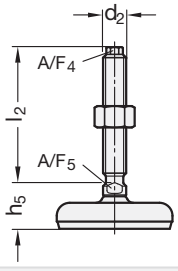

5

V without nut
VK with nut

External hexagon at the top
Wrench flat at the bottom
M 16, M 20, M 24

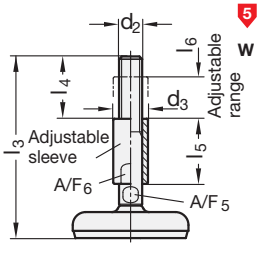

5

W with adjustable sleeve

Hygienic version (see Information)
Wrench flat at the bottom
M 16, M 20, M 24

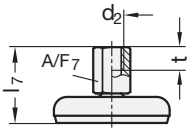

5

X with female thread

External hexagon
Female thread
M 8, M 10, M 12, M 16, M 20

d_1	d_2			d_3	h_1	h_2	h_3 $^{+4,0}_{0}$	h_4 $^{+4,0}_{0}$	h_5 $^{+4,0}_{0}$	l_4	l_5	l_6	s	A/F_1	A/F_2	A/F_3	A/F_4	A/F_5	A/F_6
50	M 8	M 10	M 12	-	14,5	3,5	23	-	-	-	-	-	3	17	-	-	-	-	-
50	M 16	-	-	-	14,5	3,5	-	29	-	-	-	-	3	-	12	8	-	-	-
60	M 8	M 10	M 12	-	16	4	24	-	-	-	-	-	3	17	-	-	-	-	-
60	M 16	-	-	24	16	4	-	30	27	45	45	29	3	-	12	8	10	12	20
80	M 8	M 10	M 12	-	18	5	26	-	-	-	-	-	3	17	-	-	-	-	-
80	M 16	-	-	24	18	5	-	32	29	45	45	29	3	-	12	8	10	12	20
80	M 20	-	-	30	18	5	-	33	30	56	56	36	3	-	15	10	13	16	24
80	M 24	-	-	35	18	5	-	36	33	67	67	42	3	-	19	12	17	20	30
100	M 8	M 10	M 12	-	20	6	28	-	-	-	-	-	3	17	-	-	-	-	-
100	M 16	-	-	24	20	6	-	34	31	45	45	29	3	-	12	8	10	12	20
100	M 20	-	-	30	20	6	-	35	32	56	56	36	3	-	15	10	13	16	24
100	M 24	-	-	35	20	6	-	38	35	67	67	42	3	-	19	12	17	20	30
120	M 20	-	-	-	22	6	-	39	-	-	-	-	4	-	15	10	-	-	-
120	M 24	-	-	-	22	6	-	42	-	-	-	-	4	-	19	12	-	-	-
120	M 30	-	-	-	22	6	-	46	-	-	-	-	4	-	24	12	-	-	-

Information

Stainless Steel-Levelling feet GN 31 with vulcanised rubber (Type B3, B4, C3 and C4) and the screw version W represent a hygienic version who obtained the EQUIPMENT ACCEPTANCE CERTIFICATE USDA (US Department of Agriculture).

Stainless Steel-Levelling feet GN 31 will be delivered mounted and are not removable.

Load rating information → Page 232

see also...

- *Stainless Steel-Levelling feet GN 33 (with fixing lug) → Page 224*
- *Levelling feet GN 30 (Steel, zinc plated) → Page 218*

How to order

1 2 3 4 5
GN 31-80-M20-100-C4-U

1	d_1
2	d_2
3	l_1 (l_2, l_3, l_7)
4	Type (Base plate)
5	Version (Stem)

GN 32 Levelling feet

Steel sheet metal, zinc plated / with fixing lug

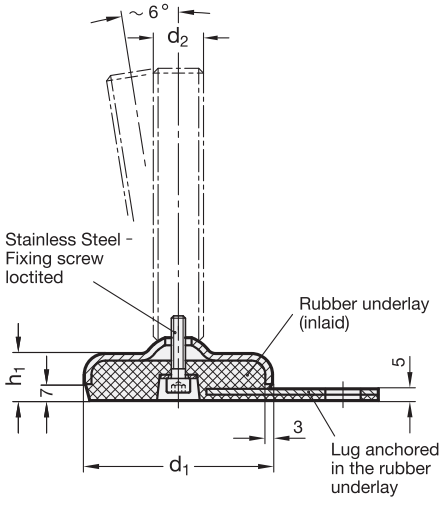

4 Type (Base plate)

A1 Steel, zinc plated
Rubber, inlaid, black

1	2	3									3				
d_1	d_2	l_1 Version S / SK				Version U / UK					l_7 Version X	h_1	d_4	l_8	l_9
50	M 8	40	50	63	-	-	-	-	-	-	40	18	13	25	45
50	M 10	50	60	80	100	-	-	-	-	-	43	18	13	25	45
50	M 12	60	80	100	125	-	-	-	-	-	47	18	13	25	45
50	M 16	-	-	-	-	75	100	125	150	200	52	18	13	25	45
60	M 8	40	50	63	-	-	-	-	-	-	41	19	13	25	50
60	M 10	50	60	80	100	-	-	-	-	-	44	19	13	25	50
60	M 12	60	80	100	125	-	-	-	-	-	48	19	13	25	50
60	M 16	-	-	-	-	75	100	125	150	200	53	19	13	25	50
80	M 8	40	50	63	-	-	-	-	-	-	42	20	13	30	70
80	M 10	50	60	80	100	-	-	-	-	-	45	20	13	30	70
80	M 12	60	80	100	125	-	-	-	-	-	49	20	13	30	70
80	M 16	-	-	-	-	75	100	125	150	200	54	20	13	30	70
80	M 20	-	-	-	-	75	100	125	150	200	62	20	13	30	70
80	M 24	-	-	-	-	100	125	150	200	-	-	20	13	30	70
100	M 8	40	50	63	-	-	-	-	-	-	43	21	13	30	80
100	M 10	50	60	80	100	-	-	-	-	-	46	21	13	30	80
100	M 12	60	80	100	125	-	-	-	-	-	50	21	13	30	80
100	M 16	-	-	-	-	75	100	125	150	200	55	21	13	30	80
100	M 20	-	-	-	-	75	100	125	150	200	63	21	13	30	80
100	M 24	-	-	-	-	100	125	150	200	-	-	21	13	30	80

Specification

- Base plate / lug, sheet metal
  Steel, zinc plated, blue passivated
- Threaded stem
  Steel, zinc plated, blue passivated
- Hexagon nut ISO 4032
  Steel, zinc plated, blue passivated
- Rubber underlay, inlaid
  black, Perbunan® (NBR)
  80±5 Shore A
- Elastomer characteristics →*Page 330*
- *Load rating information* → *Page 231*
- RoHS compliant

Versions of threaded stem

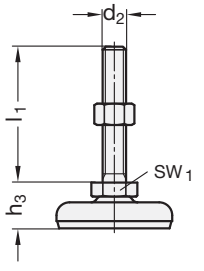

5
S without nut
SK with nut

External hexagon at the bottom
M 8, M 10, M 12

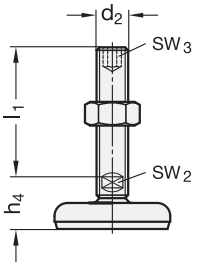

5
U without nut
UK with nut

Hexagon socket at the top
Wrench flat at the bottom
M 16, M 20, M 24

5
X with female thread

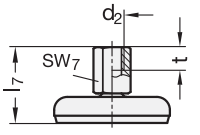

External hexagon
Female thread
M 8, M 10, M 12, M 16, M 20

d_1	d_2	h_3	h_4	A/F_1	A/F_2	A/F_3	A/F_7	t
50	M 8	26	-	17	-	-	14	8
50	M 10	26	-	17	-	-	14	10
50	M 12	26	-	17	-	-	17	12
50	M 16	-	32	-	12	8	22	16
60	M 8	27	-	17	-	-	14	8
60	M 10	27	-	17	-	-	14	10
60	M 12	27	-	17	-	-	17	12
60	M 16	-	33	-	12	8	22	16
80	M 8	28	-	17	-	-	14	8
80	M 10	28	-	17	-	-	14	10
80	M 12	28	-	17	-	-	17	12
80	M 16	-	34	-	12	8	22	16
80	M 20	-	35	-	15	10	27	20
80	M 24	-	38	-	19	12	-	-
100	M 8	29	-	17	-	-	14	8
100	M 10	29	-	17	-	-	14	10
100	M 12	29	-	17	-	-	17	12
100	M 16	-	35	-	12	8	22	16
100	M 20	-	36	-	15	10	27	20
100	M 24	-	39	-	19	12	-	-

Information

Levelling feet GN 32 will be delivered mounted and are not removable.

see also...
- *Stainless Steel-Levelling feet GN 33 (with fixing lug)* → *Page 224*
- *Levelling feet GN 30 (Steel, zinc plated, without fixing lug)* → *Page 218*

How to order

1 2 3 4 5
GN 32-100-M20-150-A1-U

1	d_1
2	d_2
3	l_1 (l_7)
4	Type (Base plate)
5	Version (Stem)

GN 33 Stainless Steel-Levelling feet

with fixing lug

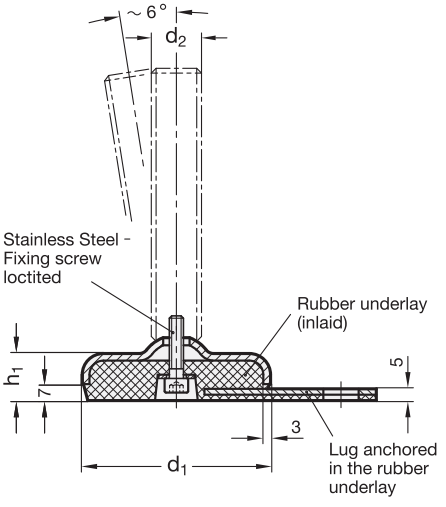

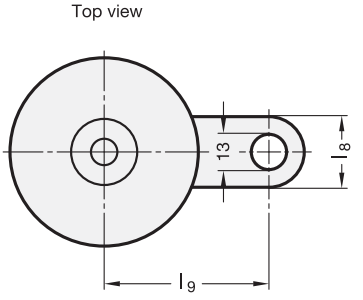

Rost frei Inox Stainless Steel

4 Type (Base plate)

B1 matt shot-blasted, rubber, inlaid black

1	2	3										3					3				3		
d_1	d_2	l_1 Version S / SK				Version T / TK und U / UK					l_2 Version V / VK				l_3 Version W				l_7 Vers. X	A/F_7	t
50	M 8	40	50	63	-	-	-	-	-	-	-	-	-	-	-	-	-	-	-	40	14	8
50	M 10	50	60	80	100	-	-	-	-	-	-	-	-	-	-	-	-	-	-	43	14	10
50	M 12	60	80	100	125	-	-	-	-	-	-	-	-	-	-	-	-	-	-	47	17	12
50	M 16	-	-	-	-	75	100	125	150	200	-	-	-	-	-	-	-	-	52	22	16
60	M 8	40	50	63	-	-	-	-	-	-	-	-	-	-	-	-	-	-	41	14	8
60	M 10	50	60	80	100	-	-	-	-	-	-	-	-	-	-	-	-	-	44	14	10
60	M 12	60	80	100	125	-	-	-	-	-	-	-	-	-	-	-	-	-	48	17	12
60	M 16	-	-	-	-	75	100	125	150	200	75	100	125	150	126	151	176	201	53	22	16
80	M 8	40	50	63	-	-	-	-	-	-	-	-	-	-	-	-	-	-	42	14	8
80	M 10	50	60	80	100	-	-	-	-	-	-	-	-	-	-	-	-	-	45	14	10
80	M 12	60	80	100	125	-	-	-	-	-	-	-	-	-	-	-	-	-	49	17	12
80	M 16	-	-	-	-	75	100	125	150	200	75	100	125	150	127	152	177	202	54	22	16
80	M 20	-	-	-	-	75	100	125	150	200	100	125	150	200	151	176	201	251	62	27	20
80	M 24	-	-	-	-	100	125	150	200	-	100	150	200	-	176	226	276	-	-	-	-
100	M 8	40	50	63	-	-	-	-	-	-	-	-	-	-	-	-	-	-	43	14	8
100	M 10	50	60	80	100	-	-	-	-	-	-	-	-	-	-	-	-	-	46	14	10
100	M 12	60	80	100	125	-	-	-	-	-	-	-	-	-	-	-	-	-	50	17	12
100	M 16	-	-	-	-	75	100	125	150	200	75	100	125	150	128	153	178	203	55	22	16
100	M 20	-	-	-	-	75	100	125	150	200	100	125	150	200	152	177	202	252	63	27	20
100	M 24	-	-	-	-	100	125	150	200	-	100	150	200	-	177	227	277	-	-	-	-

Specification

- Base plate / lug, sheet metal Stainless Steel AISI 304
- Threaded stem Stainless Steel AISI 303
- Hexagon nut ISO 4032 Stainless Steel, AISI 304
- Rubber underlay, inlaid black, Perbunan® (NBR) 80±5 Shore A
- Stainless Steel characteristics → *Page 334*
- Elastomer characteristics → *Page 330*
- RoHS compliant

Versions of threaded stem

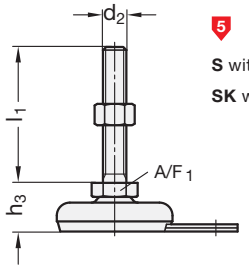

5
S without nut
SK with nut

External hexagon at the bottom
M 8, M 10, M 12

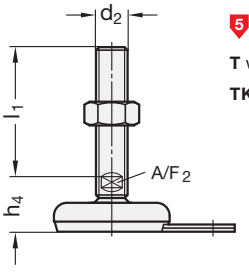

5
T without nut
TK with nut

Wrench flat at the bottom
M 16, M 20, M 24, M 30
„not dipping“ version

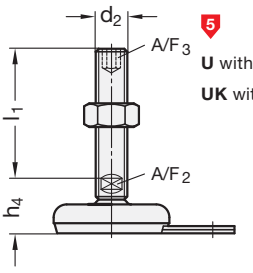

5
U without nut
UK with nut

Heagon socket at the top
Wrench flat at the bottom
M 16, M 20, M 24

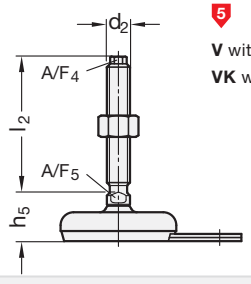

5
V without nut
VK with Inut

External hexagon at the top
Wrench flat at the bottom
M 16, M 20, M 24

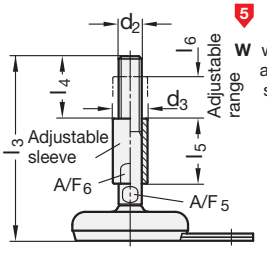

5
W with adjustable sleeve

Wrench flat at the bottom
M 16, M 20, M 24

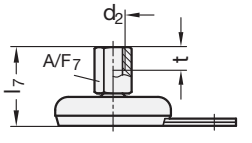

5
X with female thread

External hexagon
Female thread
M 8, M 10, M 12, M 16, M 20

d_1	d_2			d_3	d_4	h_1	h_3	h_4	h_5	l_4	l_5	l_6	l_8	l_9	A/F_1	A/F_2	A/F_3	A/F_4	A/F_5	A/F_6
50	M 8	M 10	M 12	-	13	18	26	-	-	-	-	-	25	45	17	-	-	-	-	-
50	M 16	-	-	-	13	18	-	32	-	-	-	-	25	45	-	12	8	-	-	-
60	M 8	M 10	M 12	-	13	19	27	-	-	-	-	-	25	50	17	-	-	-	-	-
60	M 16	-	-	24	13	19	-	33	30	45	45	29	25	50	-	12	8	10	12	20
80	M 8	M 10	M 12	-	13	20	28	-	-	-	-	-	30	70	17	-	-	-	-	-
80	M 16	-	-	24	13	20	-	34	31	45	45	29	30	70	-	12	8	10	12	20
80	M 20	-	-	30	13	20	-	35	32	56	56	36	30	70	-	15	10	13	16	24
80	M 24	-	-	35	13	20	-	38	35	67	67	42	30	70	-	19	12	17	20	30
100	M 8	M 10	M 12	-	13	21	29	-	-	-	-	-	30	80	17	-	-	-	-	-
100	M 16	-	-	24	13	21	-	35	32	45	45	29	30	80	-	12	8	10	12	20
100	M 20	-	-	30	13	21	-	36	33	56	56	36	30	80	-	15	10	13	16	24
100	M 24	-	-	35	13	21	-	39	36	67	67	42	30	80	-	19	12	17	20	30

Information

Stainless Steel-Levelling feet GN 33 will be delivered mounted and are not removable.

Load rating information → Page 232

see also...

- *Levelling feet GN 32 (Steel, zinc plated) → Page 222*
- *Stainless Steel-Levelling feet GN 31 (without fixing lug) → Page 220*

How to order

1 2 3 4 5
GN 33-60-M16-100-B1-V

1	d_1
2	d_2
3	l_1 (l_2, l_3, l_7)
4	Type (Base plate)
5	Version (Stem)

GN 40
without fixing lug

GN 42
with fixing lug

Levelling feet
Steel, zinc plated

GN 40

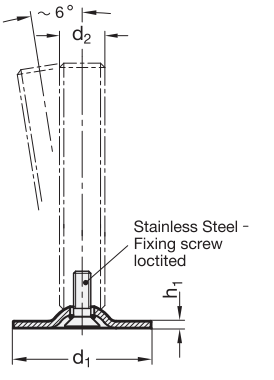

GN 42

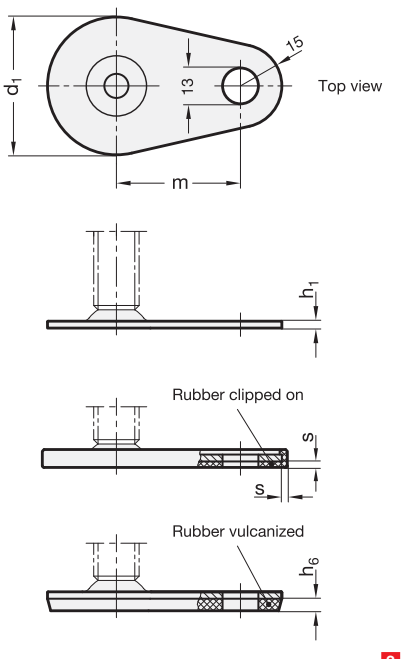

4 Type (Base plate)

A0 Steel, zinc plated, without rubber underlay

A1 Steel, zinc plated, rubber clipped on, black

D3 Stainless Steel, blank, rubber vulcanised, black

1 d_1 GN 40	d_1 GN 42	2 d_2	3 l_1 Version S / SK				l_1 Version U / UK					3 l_7 Version X	h_1	h_6	m	s
40	-	M 8	40	50	63	-	-	-	-	-	-	25	2	3,5	-	1,5
40	-	M 10	50	60	80	100	-	-	-	-	-	28	2	3,5	-	1,5
40	-	M 12	60	80	100	125	-	-	-	-	-	31	2	3,5	-	1,5
40	-	M 16	-	-	-	-	75	100	125	150	200	37	2	3,5	-	1,5
50	50	M 8	40	50	63	-	-	-	-	-	-	25	2,5	4	45	2
50	50	M 10	50	60	80	100	-	-	-	-	-	28	2,5	4	45	2
50	50	M 12	60	80	100	125	-	-	-	-	-	32	2,5	4	45	2
50	50	M 16	-	-	-	-	75	100	125	150	200	37	2,5	4	45	2
60	60	M 8	40	50	63	-	-	-	-	-	-	25	2,5	4,5	50	2
60	60	M 10	50	60	80	100	-	-	-	-	-	28	2,5	4,5	50	2
60	60	M 12	60	80	100	125	-	-	-	-	-	32	2,5	4,5	50	2
60	60	M 16	-	-	-	-	75	100	125	150	200	37	2,5	4,5	50	2
80	80	M 8	40	50	63	-	-	-	-	-	-	26	3	5	70	2
80	80	M 10	50	60	80	100	-	-	-	-	-	29	3	5	70	2
80	80	M 12	60	80	100	125	-	-	-	-	-	32	3	5	70	2
80	80	M 16	-	-	-	-	75	100	125	150	200	38	3	5	70	2
80	80	M 20	-	-	-	-	75	100	125	150	200	45	3	5	70	2
80	80	M 24	-	-	-	-	100	125	150	200	-	-	3	5	70	2

Specification

- Base plate
  - Type A0 / A1: Steel, zinc plated
  - Type D3: Stainless Steel AISI 303
- Threaded stem
  Steel, zinc plated, blue passivated
- Hexagon nut ISO 4032
  Steel, zinc plated, blue passivated
- Rubber cap, clipped on
  black, Santoprene® (TPE)
  80 ≈ Shore A
- Rubber underlay, vulcanised
  black, Perbunan® (NBR)
  70 ± Shore A
- RoHS compliant

Versions of threaded stem

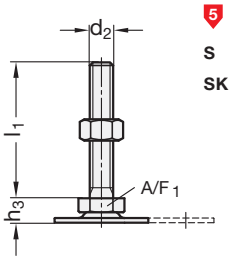

5
S without nut
SK with nut

External hexagon at the bottom
M 8, M 10, M 12

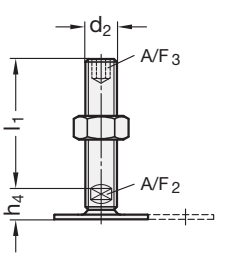

5
U without nut
UK with nut

Hexagon socket at the top
Wrench flat at the bottom
M 16, M 20, M 24

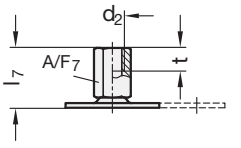

5
X with female thread

External hexagon
Female thread
M 8, M 10, M 12, M 16, M 20

d_1 GN 40	d_1 GN 42	d_2	h_3	h_4	A/F_1	A/F_2	A/F_3	A/F_7	t
40	-	M 8	10,5	-	17	-	-	14	8
40	-	M 10	10,5	-	17	-	-	14	10
40	-	M 12	10,5	-	17	-	-	17	12
40	-	M 16	-	16,5	-	12	8	22	16
50	50	M 8	11	-	17	-	-	14	8
50	50	M 10	11	-	17	-	-	14	10
50	50	M 12	11	-	17	-	-	17	12
50	50	M 16	-	17	-	12	8	22	16
60	60	M 8	11	-	17	-	-	14	8
60	60	M 10	11	-	17	-	-	14	10
60	60	M 12	11	-	17	-	-	17	12
60	60	M 16	-	17	-	12	8	22	16
80	80	M 8	11	-	17	-	-	14	8
80	80	M 10	11	-	17	-	-	14	10
80	80	M 12	11	-	17	-	-	17	12
80	80	M 16	-	17	-	12	8	22	16
80	80	M 20	-	18	-	15	10	27	20
80	80	M 24	-	20	-	19	12	-	-

Information

Levelling feet GN 40 / GN 42 are easy and very reasonably priced foot design variants.

Theywill be delivered mounted and are not removable.

- *Stainless Steel characteristics* → *Page 334*
- *Elastomer characteristics* → *Page 330*
- *Load rating information* → *Page 233*

see also...

- *Levelling feet GN 30* → *Page 218*
- *Stainless Steel-Levelling feet GN 41 (without fixing lug)* → *Page 228*
- *Stainless Steel-Levelling feet GN 43 (with fixing lug)* → *Page 228*

Levelling foot without fixing lug

1 2 3 4 5
GN 40-80-M12-100-A1-SK

1	d_1
2	d_2
3	l_1 (l_7)
4	Type (Base plate)
5	Version (Stem)

Levelling foot with fixing lug

1 2 3 4 5
GN 42-50-M12-32-D3-X

1	d_1
2	d_2
3	l_7 (l_1)
4	Type (Base plate)
5	Version (Stem)

Stainless Steel-Levelling feet

GN 41

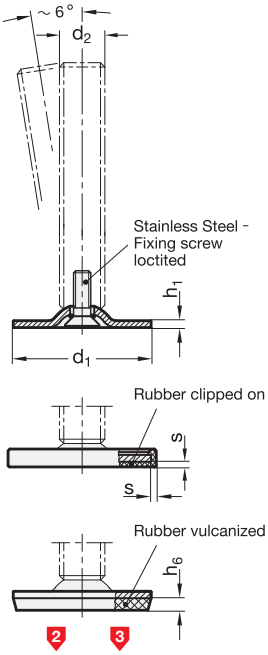

GN 43

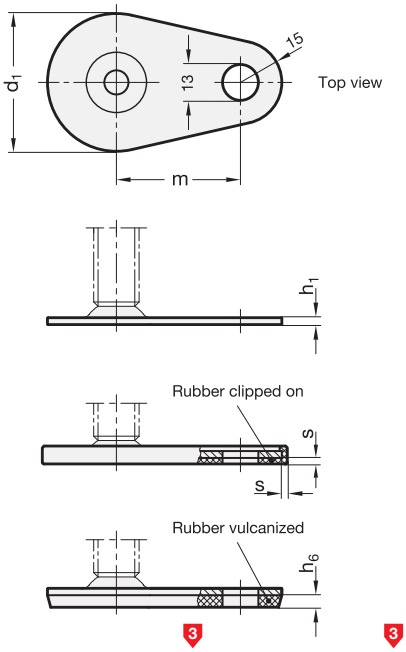

Rostfrei Inox Stainless Steel

4 Type (Base plate)

D0 blank, ground without rubber underlay

D1 blank, ground rubber, clipped on black

D3 blank, ground rubber vulcanised black

1 d_1 GN 41	d_1 GN 43	2 d_2	3 l_1 Version S / SK				l_1 Version T / TK und U / UK					3 l_2 Version V / VK					3 l_3 Version W				3 l_7 Vers. X	A/F_7	t
40	-	M 8	40	50	63	-	-	-	-	-	-	-	-	-	-	-	-	-	-	-	25	14	8
40	-	M 10	50	60	80	100	-	-	-	-	-	-	-	-	-	-	-	-	-	-	28	14	10
40	-	M 12	60	80	100	125	-	-	-	-	-	-	-	-	-	-	-	-	-	-	31	17	12
40	-	M 16	-	-	-	-	75	100	125	150	200	-	-	-	-	-	-	-	-	-	37	22	16
50	50	M 8	40	50	63	-	-	-	-	-	-	-	-	-	-	-	-	-	-	-	25	14	8
50	50	M 10	50	60	80	100	-	-	-	-	-	-	-	-	-	-	-	-	-	-	28	14	10
50	50	M 12	60	80	100	125	-	-	-	-	-	-	-	-	-	-	-	-	-	-	32	17	12
50	50	M 16	-	-	-	-	75	100	125	150	200	-	-	-	-	-	-	-	-	-	37	22	16
60	60	M 8	40	50	63	-	-	-	-	-	-	-	-	-	-	-	-	-	-	-	25	14	8
60	60	M 10	50	60	80	100	-	-	-	-	-	-	-	-	-	-	-	-	-	-	28	14	10
60	60	M 12	60	80	100	125	-	-	-	-	-	-	-	-	-	-	-	-	-	-	32	17	12
60	60	M 16	-	-	-	-	75	100	125	150	200	75	100	125	150	110	135	160	185	37	22	16
80	80	M 8	40	50	63	-	-	-	-	-	-	-	-	-	-	-	-	-	-	-	26	14	8
80	80	M 10	50	60	80	100	-	-	-	-	-	-	-	-	-	-	-	-	-	-	29	14	10
80	80	M 12	60	80	100	125	-	-	-	-	-	-	-	-	-	-	-	-	-	-	32	17	12
80	80	M 16	-	-	-	-	75	100	125	150	200	75	100	125	150	110	135	160	185	38	22	16
80	80	M 20	-	-	-	-	75	100	125	150	200	100	125	150	200	134	159	184	234	45	27	20
80	80	M 24	-	-	-	-	100	125	150	200	-	100	150	200	-	159	209	259	-	-	-	-

Specification

- Base plate Stainless Steel AISI 304
- Threaded stem Stainless Steel AISI 303
- Hexagon nut ISO 4032 Stainless Steel AISI 304
- Rubber cap, clipped on black, Santoprene® (TPE) 80 ≈ Shore A
- Rubber underlay, vulcanised black, Perbunan® (NBR) 70 ± Shore A
- RoHS compliant

Versions of threaded stem

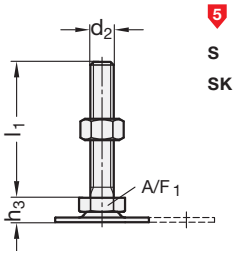

5
S without nut
SK with nut

External hexagon at the bottom
M 8, M 10, M 12

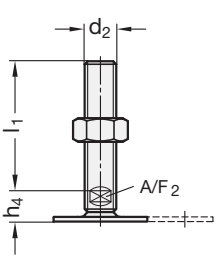

5
T without nut
TK with nut

Wrench flat at the bottom
M 16, M 20, M 24
„not dipping“ version

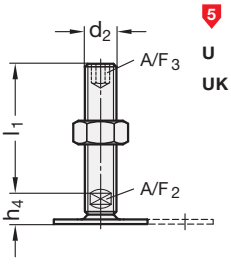

5
U without nut
UK with nut

Hexagon socket at the top
Wrench flat at the bottom
M 16, M 20, M 24

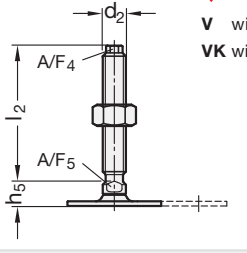

5
V without nut
VK with nut

External hexagon at the top
Wrench flat at the bottom
M 16, M 20, M 24

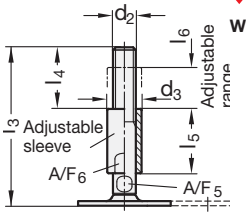

5
W with adjustable sleeve

Wrench flat at the bottom
M 16, M 20, M 24

5
X with female thread

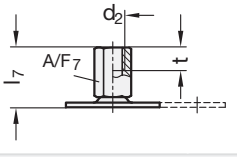

External hexagon
Female thread
M 8, M 10, M 12, M 16, M 20

d_1 GN 41	d_1 GN 43	d_2			d_3	h_1	h_3	h_4	h_5	h_6	l_4	l_5	l_6	m	s	A/F_1	A/F_2	A/F_3	A/F_4	A/F_5	A/F_6
40	-	M 8	M 10	M 12	-	2	11	-	-	3,5	-	-	-	-	1,5	17	-	-	-	-	-
40	-	M 16	-	-	-	2	-	17	14	3,5	-	-	-	-	1,5	-	12	8	-	-	-
50	50	M 8	M 10	M 12	-	2,5	11	-	-	4	-	-	-	45	2	17	-	-	-	-	-
50	50	M 16	-	-	-	2,5	-	17	14	4	-	-	-	45	2	-	12	8	-	-	-
60	60	M 8	M 10	M 12	-	2,5	11	-	-	4,5	-	-	-	50	2	17	-	-	-	-	-
60	60	M 16	-	-	24	2,5	-	17	14	4,5	45	45	29	50	2	-	12	8	10	12	20
80	80	M 8	M 10	M 12	-	3	12	-	-	5	-	-	-	70	2	17	-	-	-	-	-
80	80	M 16	-	-	24	3	-	18	15	5	45	45	29	70	2	-	12	8	10	12	20
80	80	M 20	-	-	30	3	-	18	15	5	56	56	37	70	2	-	15	10	13	16	24
80	80	M 24	-	-	35	3	-	21	18	5	67	67	42	70	2	-	19	12	17	20	30

Information

Stainless Steel-Levelling feet GN 41 / GN 43 are easy and very reasonably priced foot design variants.

The will be delivered mounted and are not removable.

- *Stainless Steel characteristics → Page 334*
- *Elastomer characteristics → Page 330*
- *Load rating information → Page 234*

Stainless Steel-Levelling foot without fixing lug

1 2 3 4 5
GN 41-80-M16-75-D0-TK

1	d_1
2	d_2
3	l_1 (l_2, l_3, l_7)
4	Type (Base plate)
5	Version (Stem)

Stainless Steel-Levelling foot with fixing lug

1 2 3 4 5
GN 43-50-M12-32-D3-X

1	d_1
2	d_2
3	l_1
4	Type (Base plate)
5	Version (Stem)

Load rating of Stainless Steel-Levelling feet GN 21 / GN 23

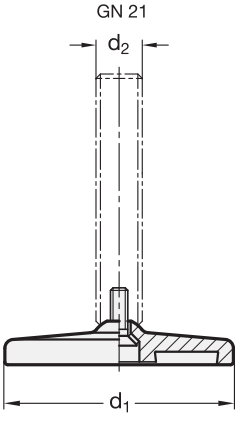

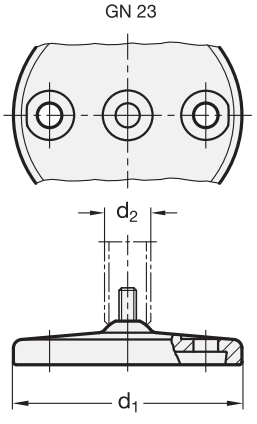

d_1	d_2	**Static load** in kN Versions of threaded stem				
		S / SK	T / TK and U / UK	V / VK	W	X
80	M 8	6	-	-	-	17
80	M 10	11	-	-	-	17
80	M 12	16	-	-	-	17
80	M 16	-	17	21	25	17
80	M 20	-	28	35	35	28
80	M 24	-	46	52	52	-
100	M 8	6	-	-	-	17
100	M 10	11	-	-	-	17
100	M 12	16	-	-	-	17
100	M 16	-	17	21	25	17
100	M 20	-	28	35	35	28
100	M 24	-	46	52	52	-
120	M 20	-	28	-	-	-
120	M 24	-	46	-	-	-
120	M 30	-	43	-	-	-

Information

At a spindle thread size M 10 and higher, the static load of the Stainless Steel-Levelling feet GN 21 / GN 23 is limited owing to the permissible contact pressure of the adjustment spindle acting on the base plate (at a spindle strength ≥ 500 N/mm²). The values given in the table (valid for type D0 without rubber underlay) assume a clean pressure load perpendicular to the base plate. Bending and buckling stress which often occurs in practice results in a lower load-bearing capacity of the adjustment spindle and may have to be taken into account.

The details given on strength are non-binding guide values without any liability. In general, they do not constitute a warranty of quality.

The user must determine from case to case if a product is suitable for the intended purpose or use. Environmental factors may influence the stated values.

Load rating of levelling feet GN 30 / GN 32

GN 30

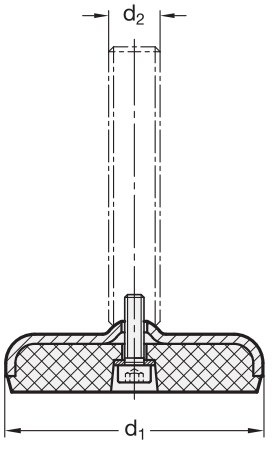

GN 32

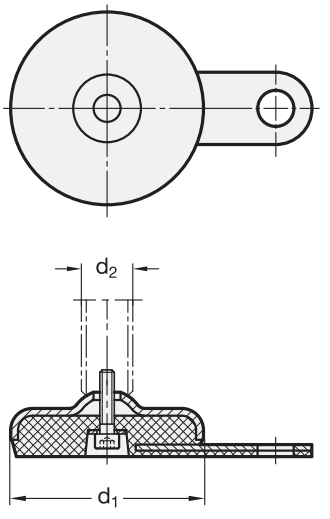

Information

The static load bearing capacity given in the table rests on a test series in which the load has been applied perpendicular to the base plate. For the values given in the table, the strain relief may result in minor deformations of the base plate.

Bending and buckling stress which often occurs in practice results in a lower load bearing capacity of the adjustment spindle and may have to be taken into account.

Also, the spindle strength is assumed to be ≥ 500 N/mm².

The details given on strength are non-binding guide values without any liability. In general, they do not constitute a warranty of quality.

The user must determine from case to case if a product is suitable for the intended purpose or use. Environmental factors may influence the stated values.

d_1	d_2	**Static load** in kN Versions of threaded stem					
		S / SK		U / UK		X	
		Rubber black	Rubber white	Rubber black	Rubber white	Rubber black	Rubber white
50	M 8	8	8	-	-	8	8
50	M 10	10	10	-	-	13	13
50	M 12	12	12	-	-	16	13
50	M 16	-	-	16	13	16	13
60	M 8	8	8	-	-	8	8
60	M 10	10	10	-	-	13	13
60	M 12	12	12	-	-	16	13
60	M 16	-	-	16	13	16	13
80	M 8	8	8	-	-	8	8
80	M 10	10	10	-	-	12	11
80	M 12	12	12	-	-	12	11
80	M 16	-	-	12	11	12	11
80	M 20	-	-	12	11	12	11
80	M 24	-	-	12	11	-	-
100	M 8	8	8	-	-	8	8
100	M 10	10	10	-	-	11	10
100	M 12	11	10	-	-	11	10
100	M 16	-	-	11	10	11	10
100	M 20	-	-	11	10	11	10
100	M 24	-	-	11	10	-	-
120	M 20	-	-	20	16	20	16
120	M 24	-	-	20	16	-	-
120	M 30	-	-	20	16	-	-

Load rating of Stainless Steel-Levelling feet GN 31 / GN 33

GN 31

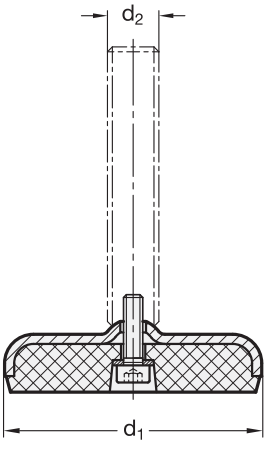

GN 33

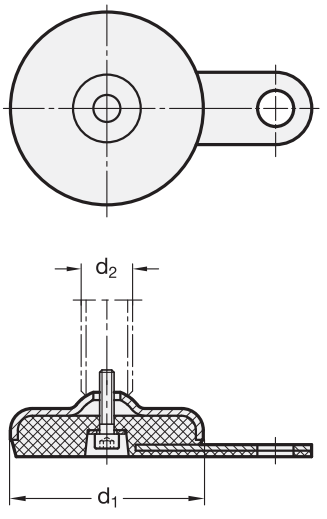

Information

The static load bearing capacity given in the table rests on a test series in which the load has been applied perpendicular to the base plate. For the values given in the table, the strain relief may result in minor deformations of the base plate.

Bending and buckling stress which often occurs in practice results in a lower load bearing capacity of the adjustment spindle and may have to be taken into account.

Also, the spindle strength is assumed to be ≥ 500 N/mm².

The details given on strength are non-binding guide values without any liability. In general, they do not constitute a warranty of quality.

The user must determine from case to case if a product is suitable for the intended purpose or use. Environmental factors may influence the stated values.

d_1	d_2	**Static load** in kN Versions of threaded stem									
		S / SK		T / TK and U / UK		V / VK		W		X	
		Rubber black	Rubber white	Rubber black	Rubber white	Rubber black	Rubber white	Rubber black	Rubber white	Rubber black	Rubber white
50	M 8	8	8	-	-	-	-	-	-	8	8
50	M 10	14	14	-	-	-	-	-	-	13	13
50	M 12	20	20	-	-	-	-	-	-	20	20
50	M 16	-	-	28	28	-	-	-	-	28	25
60	M 8	8	8	-	-	-	-	-	-	8	8
60	M 10	14	14	-	-	-	-	-	-	13	13
60	M 12	20	20	-	-	-	-	-	-	20	20
60	M 16	-	-	28	25	27	27	27	27	28	25
80	M 8	8	8	-	-	-	-	-	-	8	8
80	M 10	14	14	-	-	-	-	-	-	13	13
80	M 12	19	15	-	-	-	-	-	-	15	15
80	M 16	-	-	19	15	24	24	24	24	19	15
80	M 20	-	-	19	15	24	24	24	24	19	15
80	M 24	-	-	19	15	24	24	24	24	-	
100	M 8	8	8	-	-	-	-	-	-	8	8
100	M 10	14	14	-	-	-	-	-	-	13	13
100	M 12	17	14	-	-	-	-	-	-	17	14
100	M 16	-	-	17	14	21	21	21	21	17	14
100	M 20	-	-	17	14	21	21	21	21	17	14
100	M 24	-	-	17	14	21	21	21	21	-	-
120	M 20	-	-	25	22	-	-	-	-	25	22
120	M 24	-	-	25	22	-	-	-	-	-	-
120	M 30	-	-	25	22	-	-	-	-	-	-

Load rating of levelling feet GN 40 / GN 42

GN 40

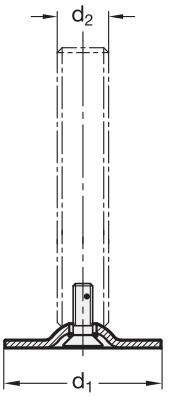

GN 42

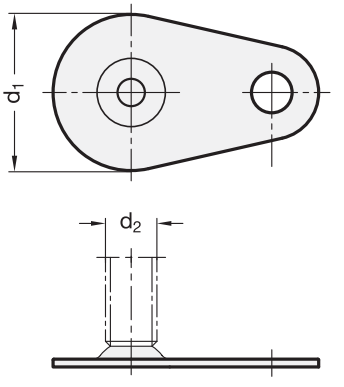

d_1		d_2	**Static load** in kN Versions of threaded stem		
GN 40	GN 42		S / SK	U / UK	X
40	-	M 8	7	-	7
40	-	M 10	7	-	7
40	-	M 12	7	-	7
40	-	M 16	-	7	7
50	50	M 8	8	-	8
50	50	M 10	8	-	8
50	50	M 12	8	-	8
50	50	M 16	-	8	8
60	60	M 8	8	-	8
60	60	M 10	10	-	10
60	60	M 12	10	-	10
60	60	M 16	-	10	10
80	80	M 8	8	-	8
80	80	M 10	10	-	10
80	80	M 12	12	-	12
80	80	M 16	-	12	12
80	80	M 20	-	16	16
80	80	M 24	-	16	-

Information

The static load bearing capacity given in the table rests on a test series in which the load has been applied perpendicular to the base plate (without rubber underlay). For the values given in the table, the strain relief may result in minor deformations of the base plate.

Bending and buckling stress which oftenoccurs in practice results in a lower load bearing capacity of the adjustment spindle and may have to be taken into account.

Also, the spindle strength is assumed to be ≥ 500 N/mm^2.

The details given on strength are nonbinding guide values without any liability. In general, they do not constitute a warranty of quality.

The user must determine from case to case if a product is suitable for the intended purpose or use. Environmental factors may influence the stated values.

Load rating of Stainless Steel-Levelling feet GN 41 / GN 43

GN 41

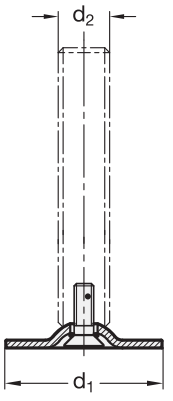

GN 43

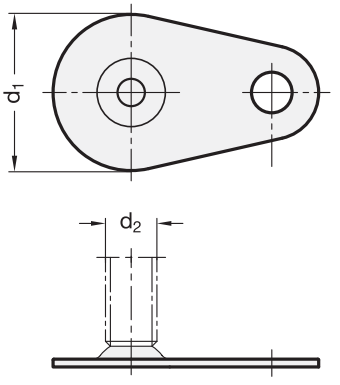

d_1		d_2	**Static load** in kN Versions of threaded stem				
GN 41	GN 43		S / SK	T / TK and U / UK	V / VK	W	X
40	-	M 8	8	-	-	-	8
40	-	M 10	12	-	-	-	12
40	-	M 12	12	-	-	-	12
40	-	M 16	-	12	-	-	12
50	50	M 8	8	-	-	-	8
50	50	M 10	14	-	-	-	14
50	50	M 12	14	-	-	-	14
50	50	M 16	-	14	-	-	14
60	60	M 8	8	-	-	-	8
60	60	M 10	14	-	-	-	14
60	60	M 12	16	-	-	-	16
60	60	M 16	-	16	16	16	16
80	80	M 8	8	-	-	-	8
80	80	M 10	14	-	-	-	14
80	80	M 12	20	-	-	-	20
80	80	M 16	-	20	20	20	20
80	80	M 20	-	20	20	20	20
80	80	M 24	-	22	22	22	-

Information

The static load bearing capacity given in the table rests on a test series in which the load has been applied perpendicular to the base plate (without rubber underlay). For the values given in the table, the strain relief may result in minor deformations of the base plate.

Bending and buckling stress which oftenoccurs in practice results in a lower load bearing capacity of the adjustment spindle and may have to be taken into account.

Also, the spindle strength is assumed to be ≥ 500 N/mm^2.

The details given on strength are nonbinding guide values without any liability. In general, they do not constitute a warranty of quality.

The user must determine from case to case if a product is suitable for the intended purpose or use. Environmental factors may influence the stated values.

GN 339
Steel / Stainless Steel

Levelling feet
Threaded stem, not adjustable

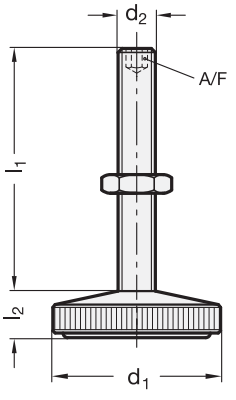

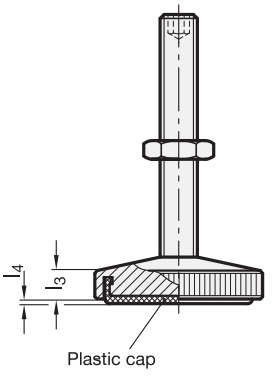

Inox Stainless Steel

4 Type

KS with plastic cap, gliding
KR with plastic cap, non-gliding

1 d_1	2 d_2	3 l_1		l_2 ≈	l_3 ≈	l_4 Type KS	l_4 Type KR	A/F
29	M 6	30	45	8	5	1	0,4	3
29	M 8	35	55	8	5	1	0,4	4
36	M 8	40	65	9	6	1	0,5	4
36	M 10	45	70	9	6	1	0,5	5

Specification

5

- Steel **ST**
  - Tensile strength class 5.8 (500 N/mm²)
  - zinc plated, blue passivated
  - Hexagon nut ISO 4035
    Steel zinc plated, blue passivated
- Stainless Steel **NI**
  - AISI 303
  - Hexagon nut ISO 4035
    Stainless Steel AISI 304
- Plastic caps:
  - Type KS
    Technopolymer (Polyacetal POM)
    white (natural colour) RAL 9001
  - Type KR
    Elastomer (TPE)
    73 shore A ≈
    black
- Hexagon nut ISO 4035
  Steel zinc plated, blue passivated
- *Elastomer characteristics → Page 330*
- *Plastic characteristics → Page 331*
- *Stainless Steel characteristics → Page 334*
- RoHS compliant

Information

Levelling feet GN 339 are used for applications in cases where no jointed link is required between foot and adjusting screw.

For this reason they offer the advantage of reduced height.

The gliding and/or the non-gliding protective cap is safely fixed in the foot.

see also...
- *Discs with cover cap (as simple feet) GN 338*
  → *Main Catalogue Page 544*

How to order

1 2 3 4 5
GN 339-36-M10-45-KR-ST

1	d_1
2	d_2
3	l_1
4	Type
5	Steel

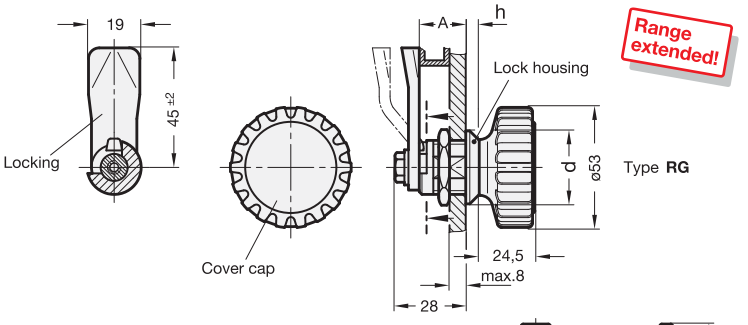

1	Type
	Operation
SG	with star knob
SK	with wrench
ST	with T-Handle
RG	with knurled knob (GN 7336)
KG	with wrench
HG	with lever
LG	with hand lever (only with locating ring in SW)

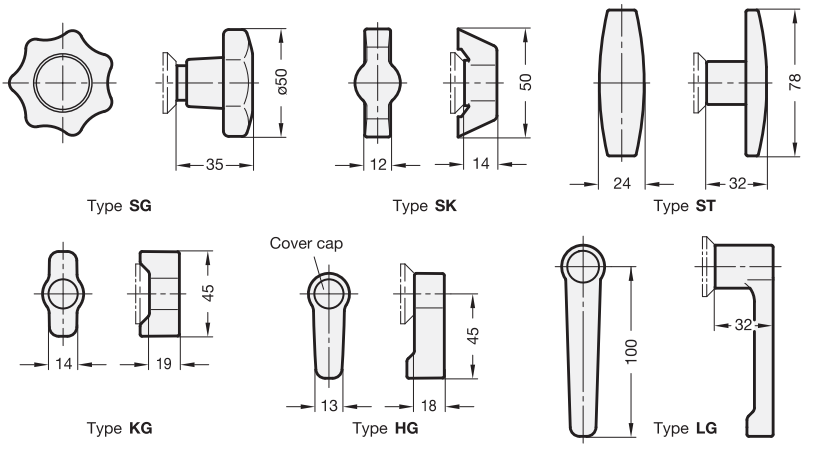

2

Latch distance **A**											**d**		**h**	
											Type SG, RG, KG, HG	Type SK, ST, LG	Type SG, RG, KG, HG	Type SK, ST, LG
4	8	13	16	20	24	28	32	36	40	45	28	32	4	6
6	10	14	18	22	26	30	34	38	42	50	28	32	4	6

Specification

3

- Lock housing
  Zinc die casting
- Locating ring
  - chrome plated (Standard) —
  - plastic coated
    black, RAL 9005, textured finish ● SW
- All other parts
  Steel zinc plated, blue passivated
- Operating handles
  Plastic (Polyamide PA)
  black, matt
- Cover cap (type RG, KG, HG, LG)
  light grey
- RoHS compliant

Information

Latches GN 115 lock by a turning operation limited to 90° which moves the locking behind the door frame. The bevels of the latch ease the closing of the door.

Latches with 22 different cranks cover a latch distance A from 4 to 50 mm.

Latches GN 115 are supplied with loosely enclosed locking.

see also...
- *Latches GN 115 (lockable)* → *Page 238*
- *Stainless Steel-Latches GN 115 (not lockable)* → *Page 240*
- *Mini-Latches GN 115.1 / GN 115.6* → *Main Catalogue Page 864*

Latch, chrome plated locating ring		
1 2	1	Type
GN 115-SG-20	2	Latch distance A

Latch, black locating ring		
1 2 3	1	Type
	2	Latch distance A
GN 115-HG-32-SW	3	Finish

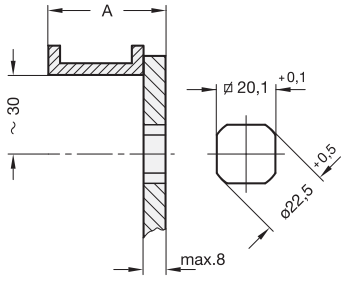

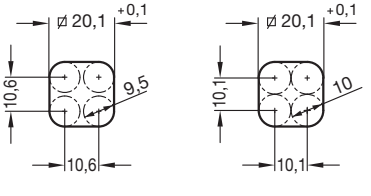

Construction and assembly instructions

For installation, set a bore diameter in the door as shown in the outline drawing opposite.

Once assembled, the latch is pushed through the bore diameter from the front. The hexagon nut can then be pushed over the latch from the back and bolted in place.

The installation bore diameter in the door leaf is usually generated by punching or laser machining in series production.

For small series and steel sheets below 2 mm thickness, the sheet metal punches GN 123 are the tool of choice → *Main Catalogue Page 876.*

The installation bore diameter can also be set by drilling / milling as shown in the outline drawings opposite.

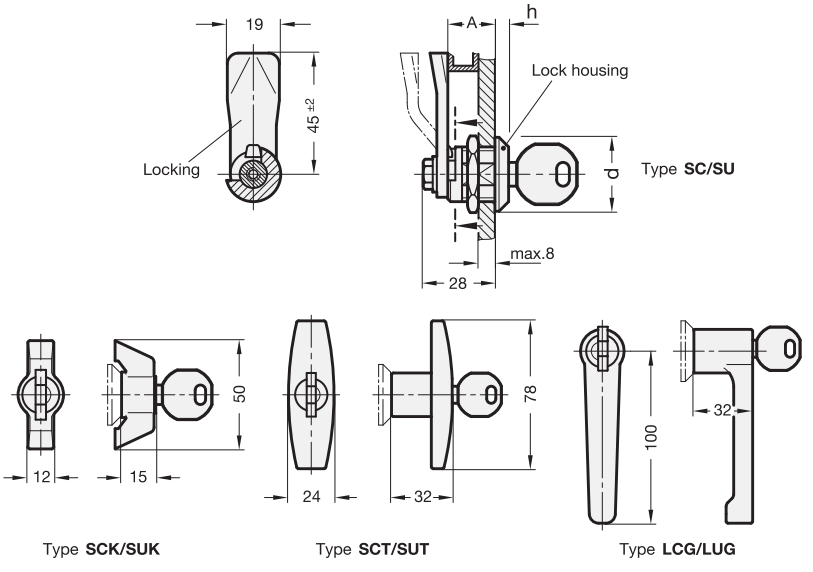

1	Type
	Operation
SC	with key (same lock)
SU	with key (different lock)
SCK	with wrench (same lock)
SUK	with wrench (different lock)
SCT	with T-Handle (different lock)
SUT	with T-Handle (different lock)
LCG	with hand lever (only in SW) (same lock)
LUG	with hand lever (only in SW) (different lock)

2

Latch distance **A**											**d**		**h**	
											Type SC, SU	Type SCK, SUK, SCT, SUT, LCG, LUG	Type SC, SU	Type SCK, SUK, SCT, SUT, LCG, LUG
4	8	13	16	20	24	28	32	36	40	45	28	32	4	6
6	10	14	18	22	26	30	34	38	42	50	28	32	4	6

Specification

- Lock housing
  Zinc die casting
- Locating ring
  - chrome plated (standard)
  - plastic coated
    black, RAL 9005, textured finish ● **SW**
- All other parts
  Steel zinc plated, blue passivated
- Key
  Nickel silver with plastic hand piece
- Wrench / T-Handle
  Plastic (Polyamide PA)
  - black, matt
- *Plastic characteristics → Page 331*
- RoHS compliant

Information

The lockable latches GN 115 lock by a turning operation limited to 90° which moves the locking behind the door frame. The bevels of the locking ease the closing of the door.

Latches with 22 different cranks cover a range A from 4 to 50 mm.

Two keys are supplied. The key may be pulled off in both end positions.

Latches GN 115 are supplied with loosely enclosed locking.

see also...

- *Latches GN 115 (not lockable) → Page 240*
- *Mini-Latches GN 115.1 → Main Catalogue Page 864*
- *Sheet metal punches GN 123 → Main Catalogue Page 876*

Latch, chrome plated locating ring		
1 2	1	**Type**
GN 115-SC-42	2	**Latch distance A**

Latch, black locating ring		
1 2 3	1	**Type**
	2	**Latch distance A**
GN 115-SU-18-SW	3	**Finish**

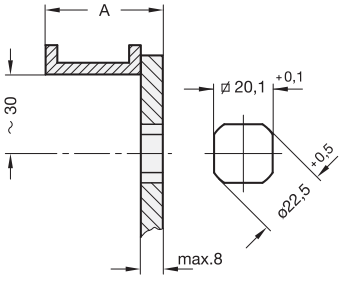

Construction and assembly instructions

For installation, set a bore diameter in the door as shown in the outline drawing opposite

Once assembled, the latch is pushed through the bore diameter from the front. The hexagon nut can then be pushed over the latch from the back and bolted in place.

The **installation bore diameter** in the door leaf is usually generated by punching or laser machining in series production.

For small series and steel sheets below 2 mm thickness, the sheet metal punches GN 123 are the tool of choice → *Main Catalogue Page 876.*

The installation bore diameter can also be set by drilling / milling as shown in the outline drawings opposite.

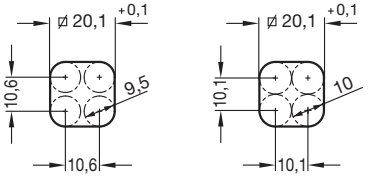

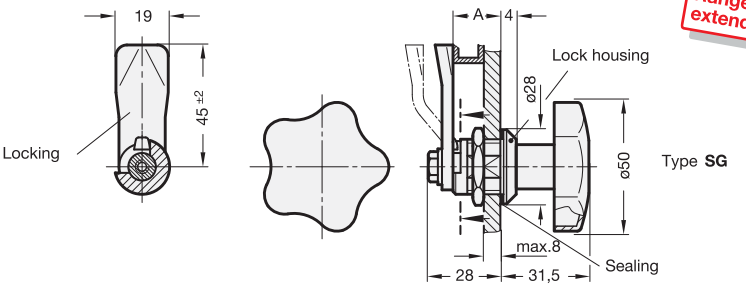

Range extended!

Inox Stainless Steel

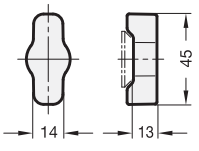

Type **KGN**

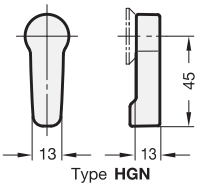

Type **HGN**

1	Type
	Operation
RG	with knurled knob in plastic (GN 7336)
KG	with wrench in plastic
HG	with lever in plastic
SG	with St. Steel-Star knob
KGN	with St. Steel-Wrench
HGN	with St. Steel-Lever

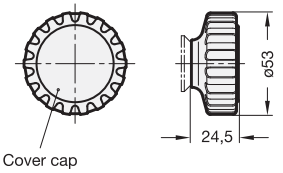

Type **RG**

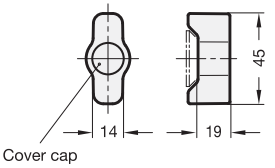

Type **KG**

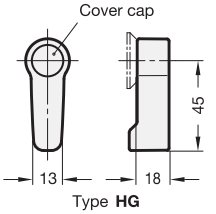

Type **HG**

2

Latch distance **A**													
6	10	14	18	20	22	24	26	28	30	34	38	40	50

Specification

3

- Lock housing
  Stainless Steel
  AISI 303 **NI**
- Latch
  Stainless Steel AISI 304
- Star knobs (Type SG)
  Stainless Steel AISI 304
  - Sheet metal , drawn
  - Hub, welded
- Operating handles (Type KGN, HGN)
  Stainless Steel AISI CF-8
- Operating handles (Type RG, KG, HG)
  Plastic (Polyamide PA)
  black, matt
- Protection class IP 65
- *Stainless Steel characteristics → Page 334*
- RoHS compliant

Information

Latches GN 115 lock by a turning operation limited to 90° which moves the locking behind the door frame. The bevels of the latch ease the closing of the door.

Latches with 22 different cranks cover a latch distance A from 4 to 50 mm.

Latches GN 115 are supplied with loosely enclosed locking.

see also...

- *Construction and assembly instructions GN 115*
  → Main Catalogue Page 859
- *Stainless Steel-Hygienic latches GN 115 (Operation with key)*
  → Main Catalogue Page 863
- *IP Protection classes → Page 327*

How to order

1 2 3

GN 115-SG-18-NI

1	**Type**
2	**Latch distance A**
3	**Material**

GN 115 Stainless Steel-Latches

lockable

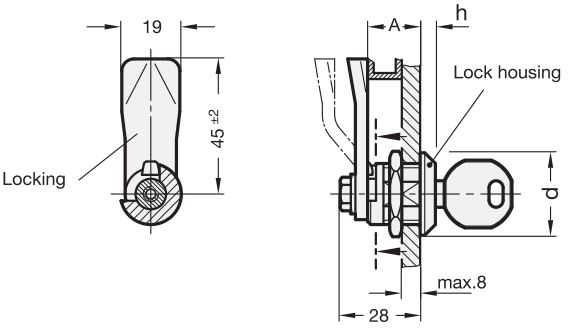

1 **Type**

SC Operation with key

2

Latch distance **A**													
6	10	14	18	20	22	24	26	28	30	34	38	40	50

Specification

3

- Lock housing
  Stainless Steel AISI 303 **NI**
- Latch
  Stainless Steel AISI 303
- Key
  Nickel silver with plastic hand piece
- Protection class IP 65
- *Plastic characteristics → Page 331*
- RoHS compliant

Information

The lockable Stainless Steel-Latches GN 115 lock by a turning operation limited to 90° which moves the locking behind the door frame. The bevels of the locking ease the closing of the door.

Latches with different cranks cover a range A from 6 to 50 mm.

Two keys are supplied. The key may be pulled off in both end positions.

Stainless Steel-Latches GN 115 are supplied with loosely enclosed locking.

see also...

- *Stainless Steel-Latches GN 115 (Operation with key, not lockable) → Main Catalogue Page 862*
- *Stainless Steel-Hygienic Latches GN 115 → Main Catalogue Page 863*

How to order		
1 2 3 GN 115-SC-40-NI	1	**Type**
	2	**Latch distance A**
	3	**Material**

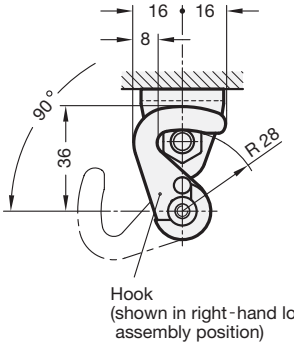

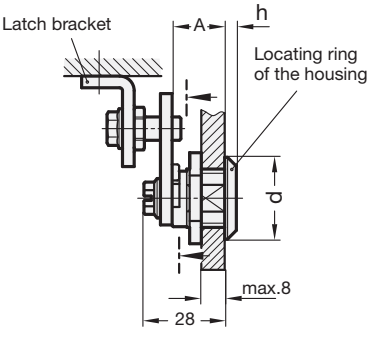

1 Type

	Operation
DK	with triangular spindle (DK7)
VK7	with square spindle A/F7
VK8	with square spindle A/F8
SCH	with slot
VDE	with double bit (VDE5)

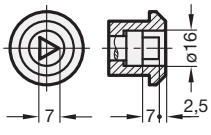

Type **DK**

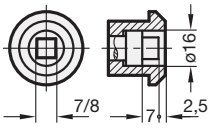

Type **VK7/VK8**

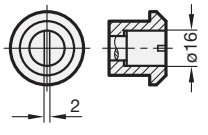

Type **SCH**

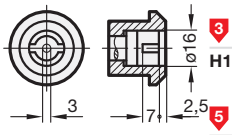

Type **VDE**

3 Version of the hook

H1	Pivot radius R=28

5 Identification no.

1	without latch bracket
2	with latch bracket

2

Hook distance **A**	**d**	**h**
18	28	4

Specification

4

- Lock housing
  Zinc die casting
- Locating ring
  - chrome plated **CR**
  - plastic coated
    black, RAL 9005, textured finish **SW**
- All other parts
  Steel zinc plated, blue passivated
- RoHS compliant

Accessory

- Keys GN 119.2 → *Main Catalogue Page 870*

On request

- Hook-type latches
  with other hook distance A
- Hook with other pivoting radius R

Information

Hook-type latches GN 115.8 with hook and latch bracket are mainly used for sliding doors and flaps. The locking action is in radial direction to the axis of rotation, resulting in a wide variety of different uses.

Hook-type latches GN 115.8 are supplied with the hook enclosed loose.

see also...
- *Hook-type latches GN 115.8 (Operating with operating elements)*
  → Page 244
- *Hook-type latches GN 115.8 (lockable) → Page 245*

How to order

1 2 3 4 5
GN 115.8-VDE-18-H1-CR-1

1	**Type**
2	**Hook distance A**
3	**Version of the hook**
4	**Finish of the locating ring**
5	**Identification no.**

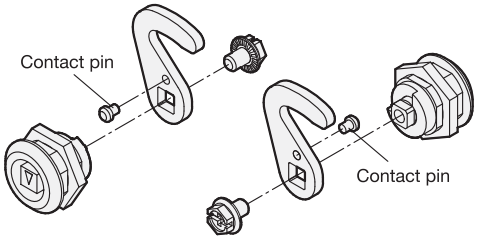

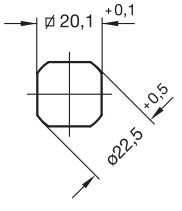

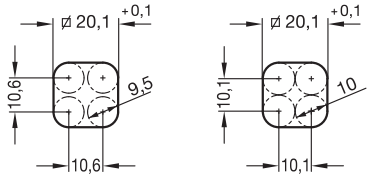

Dimensions of the latch bracket

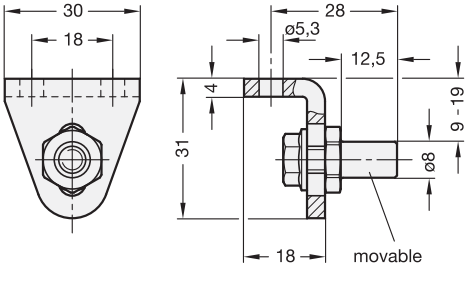

Construction and assembly instructions

The bolt diameter may be shifted by 10 mm, making it easier to adapt the locking mechanism to the installation site.

When locked, the bolt is ideally positioned at the level of the axis of rotation as shown above. A sideways offset of as much as 4 mm does not impair the proper function.

The angle of rotation of the **hook** is normally limited to 90°. Depending on the mounting of the contact pin supplied loose, the locking action is effected by turning left or right. Without the contact pin, the hook can be rotated by 360°.

For installation, set a bore diameter in the door as shown in the outline drawing opposite.

Before mounting the hook, the locking mechanism must first be mounted in the door leaf (using the enclosed hexagonal nut).

The installation bore diameter in the door leaf is usually generated by punching or laser machining in series production.

For small series and steel sheets below 2 mm thickness, the sheet metal punches GN 123 are the tool of choice → *Main Catalogue Page 876.*

The installation bore diameter can also be set by drilling / milling as shown in the outline drawings opposite.

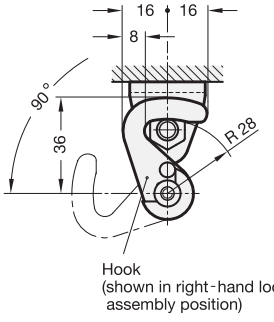

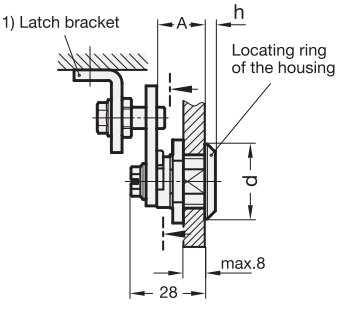

1 Type

	Operation
SG	with star knob
SK	with wrench
ST	with T-Handle
RG	with knurled knob (GN 7336)
KG	with wrench
HG	with lever

3 Version of the hook

H1	Pivot radius R=28

5 Identification no.

1	without latch bracket
2	with latch bracket

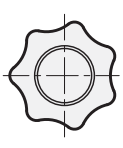

Type **SG**

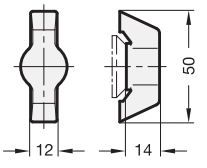

Type **SK**

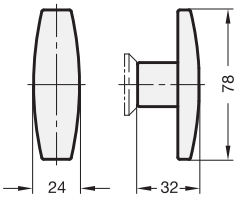

Type **ST**

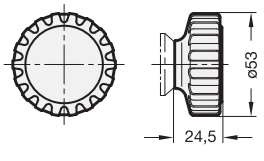

Type **RG**

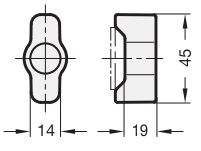

Type **KG**

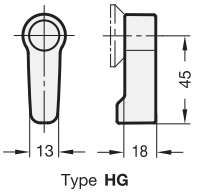

Type **HG**

2

Hook distance **A**	**d**		**h**	
	Type SG, RG, KG, HG	Type SK, ST	Type SG, RG, KG, HG	Type SK, ST
18	28	32	4	6

1) Dimensions of the latch bracket → Page 243

Specification

4

- Lock housing
  Zinc die casting
- Locating ring
  - chrome plated **CR**
  - plastic coated
    black, RAL 9005, textured finish **SW**
- All other parts
  Steel zinc plated, blue passivated
- Operating handles
  Plastic (Polyamide PA)
  black, matt
- Cover cap (type RG, KG, HG)
  light grey
- RoHS compliant

On request

- Hook-type latches
  with other hook distance A
- Hook with other pivoting radius R

Information

Hook-type latches GN 115.8 with hook and latch bracket are mainly used for sliding doors and flaps. The locking action is in radial direction to the axis of rotation, resulting in a wide variety of different uses.

Hook-type latches GN 115.8 are supplied with the hook enclosed loose.

Further construction and assembly instructions → *Page 243.*

see also...

- *Hook-type latches GN 115.8*
  (Operation with key) → *Page 241*

How to order

1 2 3 4 5
GN 115.8-HG-18-H1-SW-2

1	**Type**
2	**Latch distance A**
3	**Version of the hook**
4	**Finish of the locating ring**
5	**Identification no.**

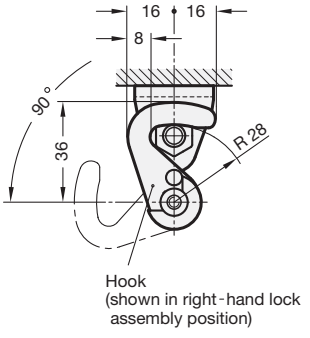

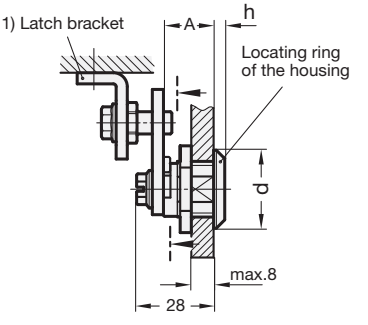

1 Type

	Operation
SC	with key (same lock)
SU	with key (different lock)
SCK	with wrench (same lock)
SUK	with wrench (different lock)
SCT	with T-Handle (same lock)
SUT	with T-Handle (different lock)

3 Version of the hook

H1	Pivot radius R=28

5 Identification no.

1	without latch bracket
2	with latch bracket

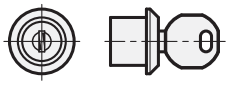

Type **SC/SU**

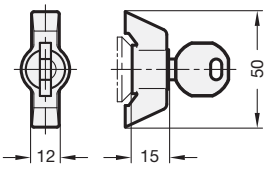

Type **SCK/SUK**

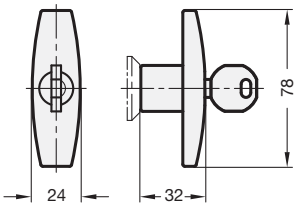

Type **SCT/SUT**

2

Latch distance **A**	**d**		**h**	
	Type SC, SU	Type SCK, SUK, SCT, SUT	Type SC, SU	Type SCK, SUK, SCT, SUT
18	28	32	4	6

1) Dimensions of the latch bracket → Page 243

Specification

4

- Lock housing
  Zinc die casting
- Locating ring
  - chrome plated **CR**
  - plastic coated
    black, RAL 9005, textured finish **SW**
- All other parts
  Steel zinc plated, blue passivated
- Key
  Nickel silver with plastic hand piece
- Wrench / T-Handle
  Plastic (Polyamide PA)
  black, matt
- RoHS compliant

On request

- Hook-type latches
  with other hook distance A
- Hook with other pivoting radius R

Information

Hook-type latches GN 115.8 with hook and latch bracket are mainly used for sliding doors and flaps. The locking action is in radial direction to the axis of rotation, resulting in a wide variety of different uses.

Two keys are supplied with the unit. The key can be removed in both end positions.

Hook-type latches GN 115.8 are supplied with the hook enclosed loose.

Further construction and assembly instructions → *Page 243.*

see also...

- *Hook-type latches GN 115.8*
  (Operation with key) → *Page 242*

How to order

1 2 3 4 5
GN 115.8-SC-18-H1-SW-1

1	**Type**
2	**Latch distance A**
3	**Version of the hook**
4	**Finish locating ring**
5	**Identification no.**

GN 119.3 Latches with cabinet „U“ handle

with cam latch

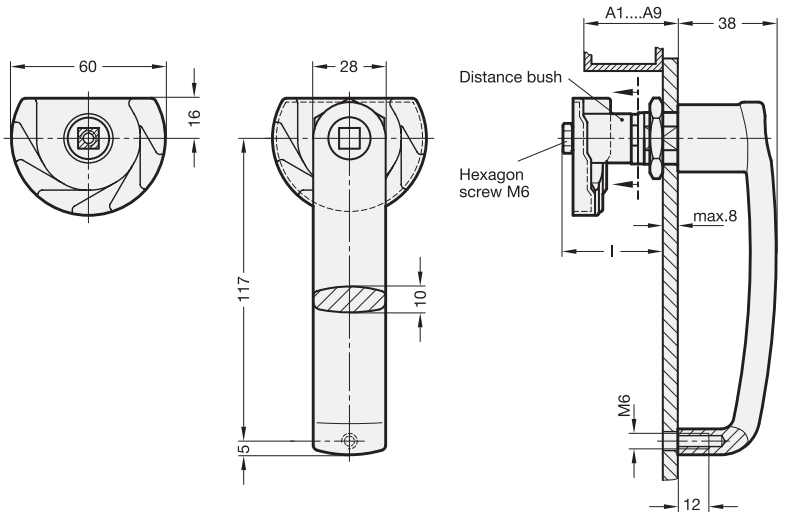

Type **DK** Type **VK7/VK8** Type **VDE**

1	Type
DK	Operation with triangular spindle (DK7)
VK7	Operation with square spindle A/F7
VK8	Operation with square spindle A/F8
VDE	Operation with double bit

Clamping range **A1...A9** (Door + frame thickness)								
A 1 (l=28)	A 2 (l=33)	A 3 (l=38)	A 4 (l=43)	A 5 (l=48)	A 6 (l=53)	A 7 (l=58)	A 8 (l=63)	A 9 (l=68)
17 - 25	22 - 30	27 - 35	32 - 40	37 - 45	42 - 50	47 - 55	52 - 60	57 - 65

Specification

3

- “U“ handle
  Zinc die casting
  plastic coated
  black, RAL 9005, textured finish ● SW
  silver, RAL 9006, textured finish ○ SR
- Cam latch
  Sheet Steel zinc plated, blue passivated
- Distance piece
  Aluminum
- other parts
  Steel
  zinc plated, blue passivated
- RoHS compliant

Accessory

- Key GN 119.2 → *Main catalogue page 870*

Information

Latches with cabinet „U“ handle GN 119.3 are used when the application requires both a locking mechanism and a handle.

The cabinet „U“ handle with integrated lock is an attractively designed and cost-effective solution.

The locking mechanisms have a draw-in range of 10 mm. The unit is locked by turning clockwise.

see also...

- *Latches with cabinet „U“ handles GN 115.7*

→ *Main catalogue page 866*

How to order		
1 2 3	1	**Type**
GN 119.3-DK-A4-SW	2	**Clamping range A**
	3	**Finish**

Latches with cabinet „U“ handle GN 119.3
Latches with cabinet „U“ handle GN 115.7 → *Main catalogue Page 866*
Keys GN 119.2 → *Main catalogue Page 870*

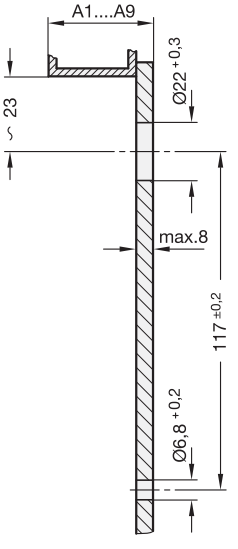

Technical and assembly instructions

By turning the latch clockwise, the stepped door locking bar engages behind the door frame and pulls the door shut.

The large tractive range of 10 mm also allows doors with sealing strips to be locked without any problems. When selecting the clamping range A, the sealing strip may have to be taken into account.

For mounting, the door is fitted with two bore holes as shown in the outline drawing opposite, attached at a distance of 23 mm from the door frame.

The spigot (M22x1,5) has 4 surfaces, allowing the cabinet „U“ handle also to be used with the standard bore holes of door latches GN 119 → *Main catalogue page 848.*

The locking enclosure with the preassembled operating bolt is pushed through from the front and fixed in place with the hexagonal nut. The distance sleeve and the door locking bar is then plugged on at the back and fixed in place with the hexagonal screw.

GN 115.10 Latches with gripping tray

Operation with key, not lockable

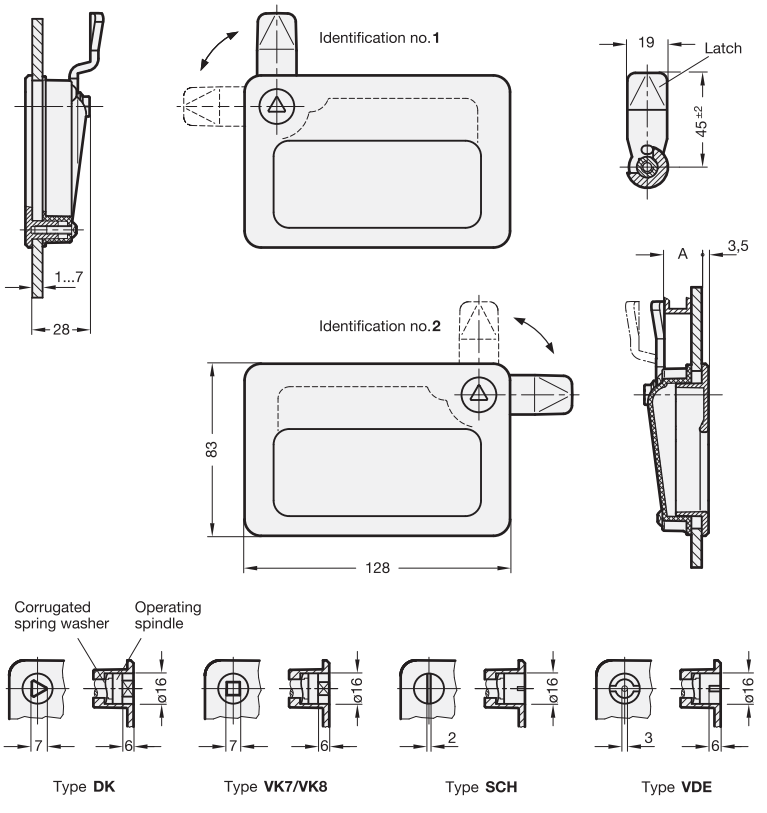

1 Type

	Operation
DK	with triangular spindle (DK7)
VK7	with square spindle A/F7
VK8	with square spindle A/F8
SCH	with slot
VDE	with double bit

3 Identification no.

1	Operation, in drawn position, at the top left
2	Operation, in drawn position, at the top right

2

Latch distance **A**																					
4	6	8	10	13	14	16	18	20	22	24	26	28	30	32	34	36	38	40	42	45	50

Specification

4

- Front frame
  Zinc die casting
  plastic coated
  black, RAL 9005, textured finish ● **SW**
  silver, RAL 9006, textured finish ○ **SR**
- Tray
  Plastic
  - black grey (for SW)
  - light grey (for SR)
- Operating part
  Zinc die casting
  - plastic coated, black (for SW)
  - chrome-plated (for SR)
- other parts
  Steel
  zinc plated, blue passivated
- RoHS compliant

Accessory

- Keys GN 119.2 → *Main catalogue Page 870*

Information

Latches with gripping tray GN 115.10 are used in applications which require a moulded recess in addition to the latching mechanism, e.g. if operating elements are not allowed to protrude for reasons of space.

A rotary movement limited to 90°, e.g. of the three-edged wedge in type DK, moves the latch behind the frame, with the run-up bevels at the latch making it easier to close the door.

Latches with 22 different cranks cover a latch distance A from 4 to 50 mm.

Latches GN 115.10 are supplied with loosely enclosed locking.

see also...

- *Latches with cabinet „U“ handles GN 115.7 → Main catalogue Page 866*

How to order

1 2 3 4

GN 115.10-SCH-20-2-SR

1	**Type**
2	**Latch distance A**
3	**Identification no.**
4	**Finish**

Construction and assembly instructions

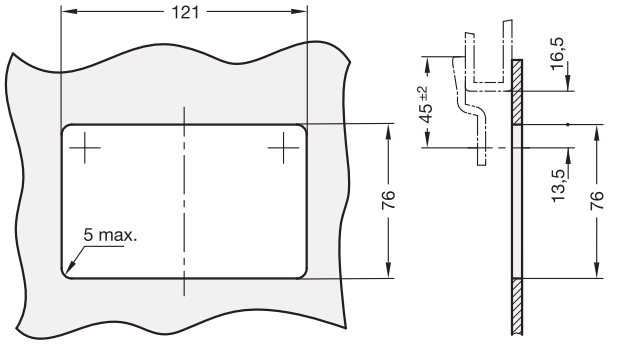

Before assembly, a nick must be made in the door as shown in the drawing below.

Depending on position of the latch, the 16,5 mm edge spacing between frame and nick must be ensured sideways and / or top and bottom to make sure that the latch is positioned behind the frame.

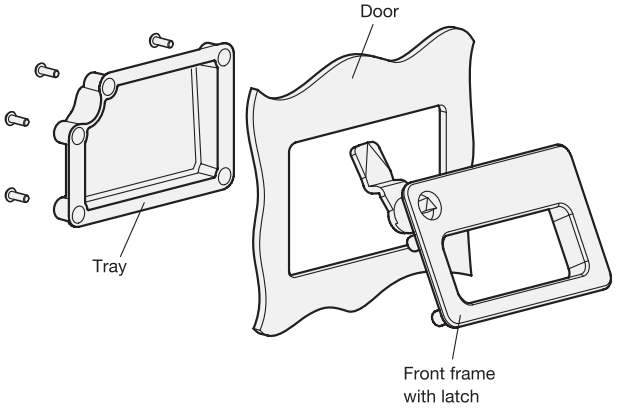

For the assembly, insert the front frame together with the pre-assembled latch from the front through the nick of the door by tilting.

Place the plastic tray from the back onto the bore pegs of the front frame.

The M4x12 fillister-head screws included are then screwed in from the rear and tightened to fix and wedge the whole unit in place. The minimum screw-in depth of the screw is guaranteed with a maximum door wall thickness of 7 mm.

Assembly example

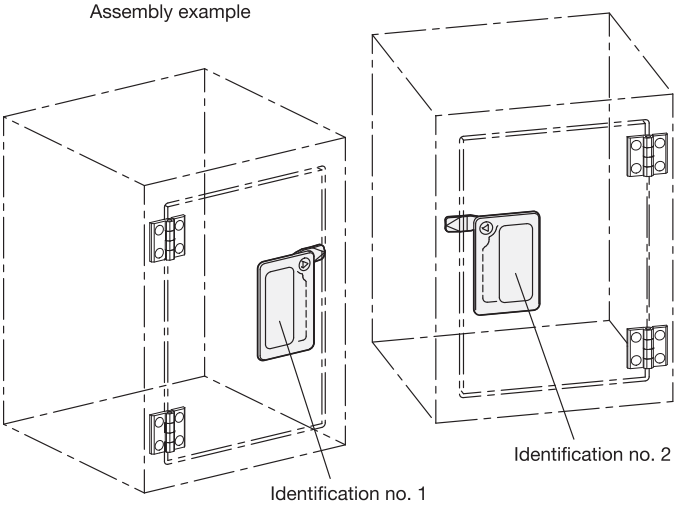

GN 115.10 Latches with gripping tray

lockable

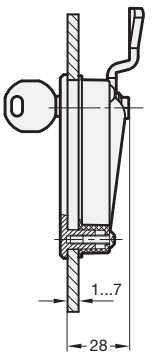

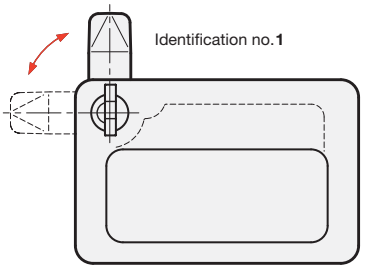

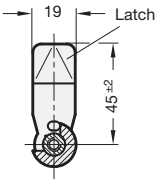

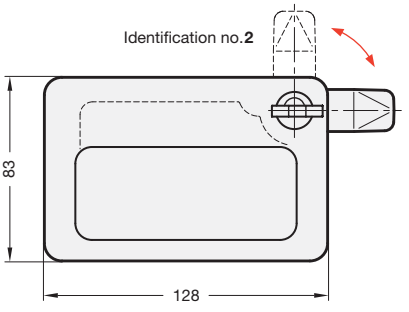

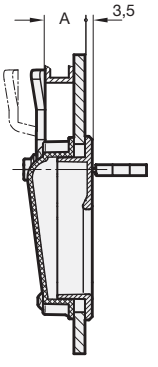

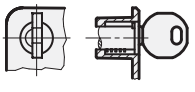

1 Type

SC Operation with key (same lock)

SU Operation with key (different lock)

3 Identification no.

1 Operation, in drawn position, at the top left

2 Operation, in drawn position, at the top right

2

Latch distance **A**																					
4	6	8	10	13	14	16	18	20	22	24	26	28	30	32	34	36	38	40	42	45	50

Specification

4

- Front frame
  Zinc die casting
  plastic coated
  black, RAL 9005, textured finish ● **SW**
  silver, RAL 9006, textured finish ○ **SR**
- Tray
  Plastic
  - black grey (for SW)
  - light grey (for SR)
- Key
  Nickel silver with plastic hand piece
- other parts
  Steel
  zinc plated, blue passivated
- RoHS compliant

Information

Latches with gripping tray GN 115.10 are used in applications which require a moulded recess in addition to the latching mechanism, e.g. if operating elements are not allowed to protrude for reasons of space.

A rotary movement limited to 90° moves the latch behind the frame, with the run-up bevels at the latch making it easier to close the door.

Latches with 22 different cranks cover a latch distance A from 4 to 50 mm.

Latches GN 115.10 are supplied with loosely enclosed locking.

see also...

- *Latches with cabinet „U“ handles GN 115.7* → *Main catalogue Page 866*

How to order

1 2 3 4

GN 115.10-SC-20-2-SW

1	**Type**
2	**Latch distance A**
3	**Identification no.**
4	**Finish**

GN 702 Stop locks

with 4 indexing positions (4 x 90°)

Type **A**

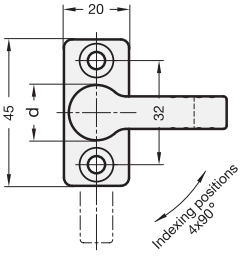

Type **B**

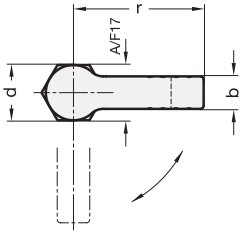

Type **C**

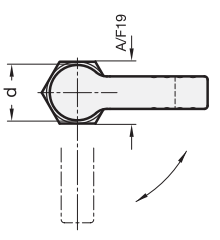

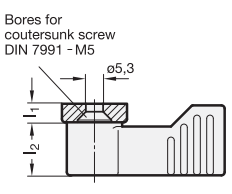

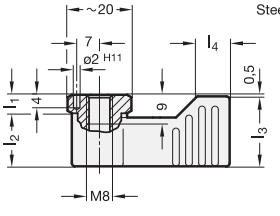

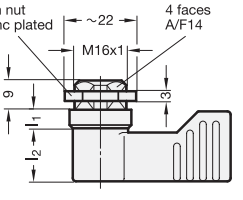

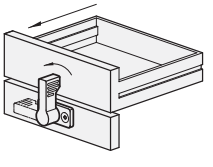

3 Type

A with flange
for surface mounting
B with female thread
C with male thread

1 d	2 r	b	l_1 ≈	l_2	l_3 min.	l_4
17	40	10	5,5	16,5	21,5	11

Specification

4

- Latch
  Zinc die casting
  plastic coated
  black, RAL 9005, textured finish **SW**
  red, RAL 3000, textured finish **RS**
- Indexing mechanism
  - Type A / Type B
    Steel / Plastic
    Steel parts zinc plated, blue passivated
  - Type C
    Zinc die casting / Plastic
- Fastening flange
  Zinc die casting
  plastic coated
  black, matt
- RoHS compliant

Information

Stop locks GN 702 type C have the same connecting dimensions as the mini locks GN 115.1. The mounting bores are to be selected and asset accordingly.

In standard production, the **mounting bore holes** are usually made by punching or with laser.

The sheet metal punch GN 123 → *Main Catalogue Page 876* is recommended for small series and sheet metal with a thickness of below 2 mm.

The mounting bore holes can also be made by drilling / milling.

Mounting holes

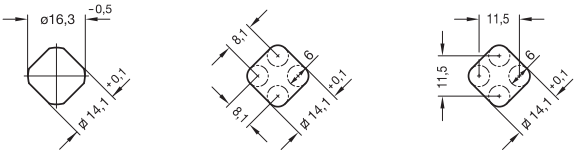

How to order

1 2 3 4

GN 702-17-40-C-SW

1	d
2	r
3	Type
4	Colour

GN 720 Stop locks

with 4 indexing positions (4 x 90°)

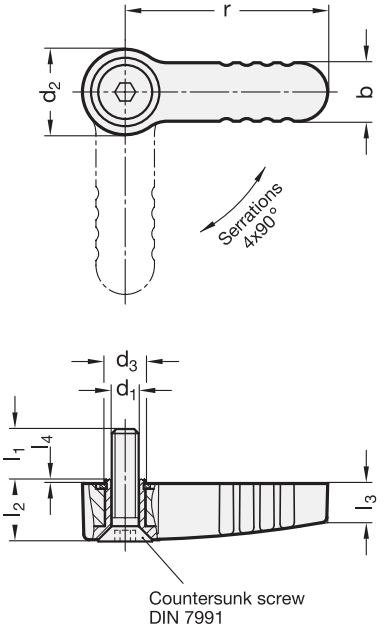

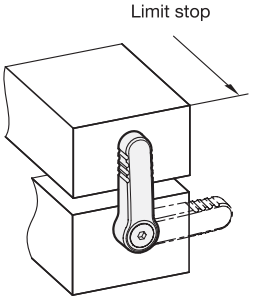

3 Type

A Mounting with countersunk screw

1 r	2 d_1	b	d_2	d_3	l_1	l_2	l_3	l_4	Load F max. in N
45	M 6	13	19	9	12	13	8,5	0,5	500
65	M 8	18	25	14	14	16	10,5	0,6	1000

Specification

4

- Latch
  Zinc die casting
  plastic coated
  black, RAL 9005, textured finish ● SW
  silver, RAL 9006, textured finish ○ SR
- Indexing mechanism
  Stainless Steel
- Countersunk screw DIN 7991
  Stainless Steel (A2)
- RoHS compliant

Information

Stop locks GN 720 may be used as stops and feature a high degree of stability.

The inside ball-spring latching mechanism has 4 latching positions at a distance of 90° each. Thanks to the bolt attachment using the countersunk screw, the latching position is freely selectable.

The bar is solid and may be machined, if required.

The countersunk screw is enclosed as part of the set.

How to order

1 2 3 4

GN 720-65-M8-A-SW

1	r
2	d_1
3	Type
4	Colour

Hinges with safety switch GN 139.1 → *Page 254*
Hinges (without switch) GN 139.2 → *Page 254*
Stainless Steel-Hinges with safety switch GN 139.5 → *Page 256*
Stainless Steel-Hinges (without switch) GN 139.6 → *Page 256*
Mounting plates GN 139.3 / GN 139.4 → *Page 258*

GN 139.1
with switch

GN 139.2
without switch

Hinges with safety switch
Zinc die casting

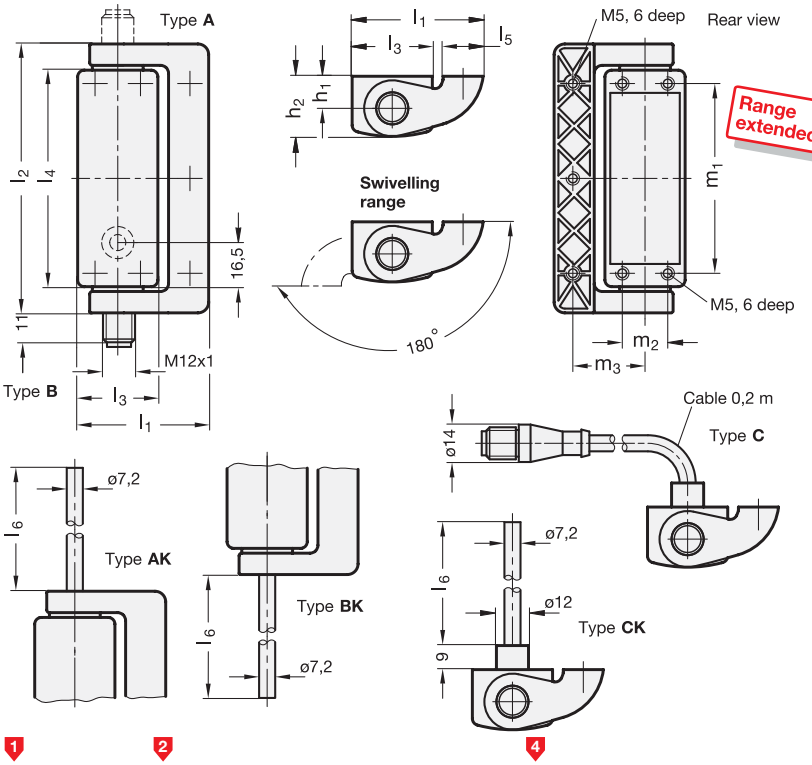

3 Type

A	Connector plug at the top
B	Connector plug from the bottom
C	Connector plug at the back, (with 0,2 m cable)
AK	Connector cable at the top
BK	Connector cable from the bottom
CK	Connector cable at the back

1 l_1 small hinge wing	1 l_1 broad hinge wing	2 l_2	l_3	l_4	l_5 small hinge wing	l_5 broad hinge wing	4 l_6 Cable length in meter Type AK / BK / CK		h_1	h_2	m_1	m_2	m_3 small hinge wing	m_3 broad hinge wing
49	79	101	30	81	15	30	2	5	12	22,5	71	17	27	50

Specification

- Zinc die casting
  plastic coated
  silver metallic
- Pin
  Stainless Steel AISI 303
- *Stainless Steel characteristics* → *Page 334*
- RoHS compliant

Accessories

- Cable with connection coupling
  → *Main Catalogue Page 890*
  8-pin, 5 and/or 10 meter long:
  - GN 330-M12x1-8-G-5
  - GN 330-M12x1-8-G-10
- Mounting plates GN 139.3 / GN 139.4
  → *Page 258*

On request

- Hinges with operation angle > 0°
- Hinges with other contact terminations

Information

Hinges GN 139.1 with integrated safety switches have been designed for monitoring doors and covers of machines and plants. Opening the door will activate the switch contacts which, in turn, will then e.g. interrupt a protective circuit via break contact (NC) and at the same time signal the door opening by closing a normally open contact element (NO). The contact blocks are fitted with positive opening slow-action contacts, i.e. they will definitely be separated when activated and have no hysteresis. The angle at which the switching points are reached are adjustable (see contact travel diagram).

Together with the integrated contact blocks, the hinges are a compact, easy to mount unit with an attractive design. The mounting from the back make the hinge more tamper-proof.
Hinges **GN 139.2** without switching function act as additional hinges e.g. for larger doors or gates where several hinges are required.

Hinge with safety switch		
1 2 3 4	1	l_1
GN 139.1-49-101-AK- 5	2	l_2
	3	Type
	4	l_6

Hinge without safety switch		
1 2	1	l_1
GN 139.2-79-101	2	l_2

Mechanical features

Maximum load Information with safety factor	Load direction	L_A 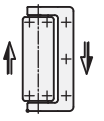	L_{R0} 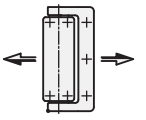	L_{R90}
Examples of calculation → *see operating instruction*	**I_1 = 49**	1500 N	1000 N	1000 N
	I_1 = 79	750 N	500 N	500 N

Fixing	from the back, 7 x threads M5, 6 mm deep	
Recommended torque	5 Nm (Screws M5)	
Protection class	IP67 / IP69K (Mind the cable conduit!)	acc. to EN 60529
Switching principle, contact opening	Slow-action contacts force-fitted, with positive opening	acc. to IEC 60947-5-1, K
Contact material	Silver alloy	
Operating travel diagram (scheme)	The switching points are adjustable up to 4° in direction of 0°. *see operating instruction* 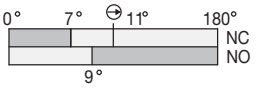	
Maximum operating frequency	600 operating cycles / hour	acc. to IEC 60947-5-1, one operating cycle includes one opening and one closing action
Mechanical life span	10^6 operating cycles	
Actuating speed	min. 2° / second, max. 90° / second	

Electrical features / Safety features

Utilization category	AC 15: 24 Vac / 2A / DC 13: 24 Vdc / 2A (connector plug) AC 15: 250 Vac / 4A / DC 13: 250 Vdc / 0,3 A (cable)	acc. to EN 60947-5-1
Contacts, termination 8-pole connector M12 or cable with 2 m or 5 m length **Pin and cable assignment**	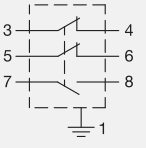 1 - green-yellow 3 - black 4 - black-white 5 - red 6 - red-white 7 - brown 8 - blue	
Type of cable	Type N 7 x0,5 mm², jacket PVC H05VV-F	acc. to IEC 60332-1-2 et seqq.
Short-circuit current	1000 A	acc. to EN 60947-5-1
Rated insulation voltage	30 V AC / 36 V DC (connector plug) / 250 Vac (cable)	
Short-circuit protection	2 A, 500 V, Typ gG (connector plug) / 6 A, 500 V, Typ gG (cable)	
Ambient temperature	- 25 °C up to + 80 °C	
Degree of pollution, external	3	acc. to EN 60947-5-1
Mission time (T_M)	20 years	acc. to EN ISO 13849-1
Number of cycles (B10 d)	5 000 000	acc. to EN 61820-2

Approvals, Conformities, Applicability

Low-voltage switchgear and controlgear CE declaration IMQ: CA02.03746 UL: E 131787	CE IMQ c UL us	EN 60947-1/2007 EN 60947-1-5 : 2004 + A1/2009
Safety applications	up to SIL 3 / PL e	acc. to EN ISO 13849-1

Other important details and hints are given in the operating instruction for GN 139.1 hinges which are included with every hinge and which are also available as PDF downloads from „www.ganter-griff.com“ under ‚Service‘.

The hinges with safety switch must be mounted and commissioned by qualified technical personnel in compliance with the details given in the operating instructions and with the national and international rules and regulations and the applicable standards. Otto Ganter GmbH & Co. KG will assume no statutory liability for missing or incorrect information and for any consequences arising therefrom.

Hinges with safety switch

Stainless Steel

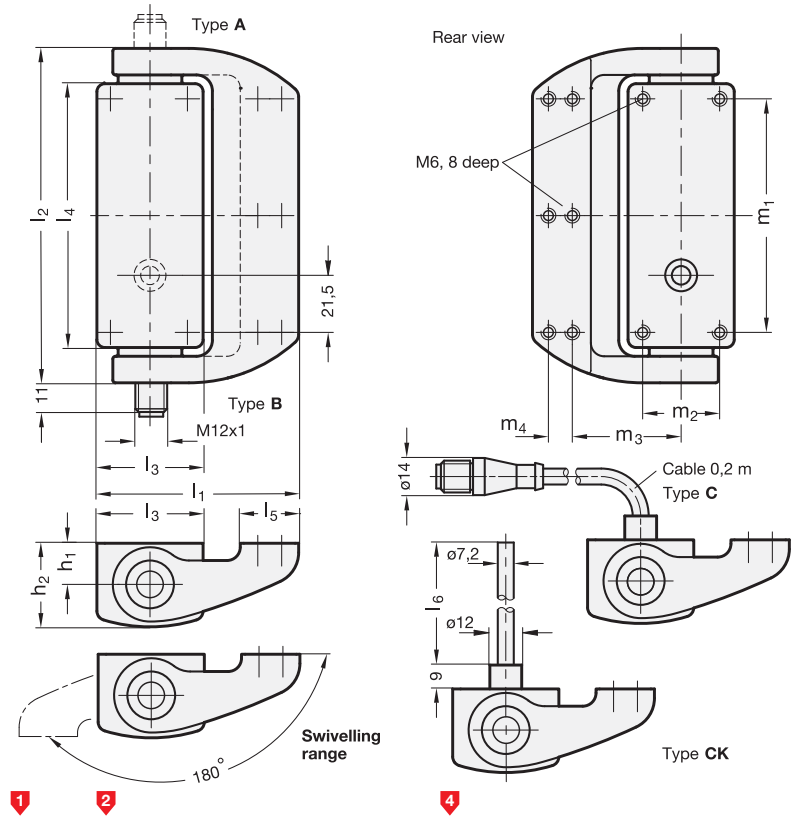

Inox Stainless Steel

3 Type

- **A** Connector plug at the top
- **B** Connector plug from the bottom
- **C** Connector plug at the back (with 0,2 m cable)
- **CK** Cable from the back

1 l_1	2 l_2	l_3	l_4	l_5	4 l_6 Cable length in metre Type CK		h_1	h_2	m_1	m_2	m_3	m_4
76	126	40	99,4	22	2	5	15,5	31,5	88	29	41	9

Specification

- Stainless Steel precision casting
  - AISI 316L
  - polished, Ra < 0,8 µm
- Pin
  Stainless Steel AISI 316L
- *Stainless Steel characteristics → Page 334*
- RoHS compliant

Accessory

- Cable with connector coupling
  → *Main Catalogue Page 890*
  8-pole, 5 or 10 meter long:
  - GN 330-M12x1-8-G-5
  - GN 330-M12x1-8-G-10

On request

- Hinges with operating angle > 0°
- Hinges with other contact loadings

Information

Hinges GN 139.5 with integrated safety switches have been designed for monitoring doors and covers of machines and plants. Opening the door will activate the switch contacts which, in turn, will then e.g. interrupt a protective circuit via break contact (NC) and at the same time signal the door opening by closing a normally open contact element (NO). The contact blocks are fitted with positive opening slow-action contacts, i.e. they will definitely be separated when activated and have no hysteresis. The angle at which the switching points are reached are adjustable.

Together with the integrated contact blocks, the hinges are a compact, easy to mount unit with an attractive design. The mounting from the back make the hinge more tamper-proof. Hinges GN 139.6 without switching function act as additional hinges, e.g. for larger doors or gates where several hinges are required.

Hinge with safety switch

1 2 3 4
GN 139.5-76-126-CK-5

1	l_1
2	l_2
3	Type
4	l_6

Hinge without safety switch

1 2
GN 139.6-76-126

1	l_1
2	l_2

Mechanical features

Maximum load Information with safety factor Examples of calculation ➔ *see operating instruction*	Load direction	L_A 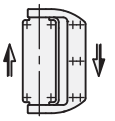	L_{R0} 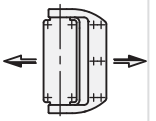	L_{R90}
	F max.	2000 N	2000 N	2000 N
Fixing	from the back, 10 x threads M6, 8 mm deep			
Recommended torque	10 Nm (Screws M6)			
Protection class	IP67 / IP69K (Mind the cable conduit!)		acc. to EN 60529	
Switching principle, contact opening	Slow-action contacts force-fitted, with positive opening		acc. to IEC 60947-5-1	
Contact material	Silver alloy			
Operating travel diagram (scheme)	The switching points are adjustable up to 2° in direction of 0°. ➔ *see operating instruction*	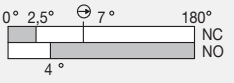		
Maximum operating frequency	600 operating cycles / hour		acc. to IEC 60947-5-1, one operating cycle includes one opening and one closing action	
Mechanical life span	10^6 operating cycles			
Actuating speed	min. 2° / second, max. 90° / second			

Electrical features / Safety features

Utilization category	AC 15: 24 Vac / 2A / DC 13: 24 Vdc / 2A (connector plug) AC 15: 250 Vac / 3A / DC 13: 250 Vdc / 0,3 A (cable)	acc. to EN 60947-5-1
Contacts, termination 8-pole connector M12 or 9 wire cable with 2 m or 5 m length **Pin and cable assignment**	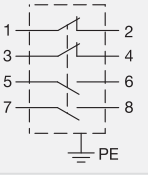 1 - black 2 - black-white 3 - red 4 - red-white 5 - brown 6 - blue 7 - purple 8 - purple-white PE - yellow-green (only Type CK)	
Type of cable	9x0,34 mm², PVC H05VV-F, black	acc. to IEC 60332-1
Short-circuit current	1000 A	acc. to EN 60947-5-1
Rated insulation voltage	30 V AC / 36 V DC (connector plug) / 250 Vac (cable)	
Short-circuit protection	2 A, 500 V, Typ gG (connector plug) / 3 A, 500 V, Typ gG (cable)	
Ambient temperature	- 25 °C up to + 80 °C	
Degree of pollution, external	3	acc. to EN 60947-5-1
Safety parameters	B10: 1 000 000, B10 d: 5 000 000, B10 / B10 d: 20%	acc. to EN ISO 13849-1

Approvals, Conformities, Applicability

Low-voltage switchgear and controlgear CE declaration EAC- and UL-certified	CE EAC c UL us	EN 60947-1/2007 EN 60947-1-5 : 2004 + A1/2009
Safety applications	until SIL 3 / PL e	acc. to EN ISO 13849-1

Other important details and hints are given in the operating instruction for GN 139.5 hinges which are included with every hinge and which are also available as PDF downloads from „www.ganter-griff.com“ under ‚Service‘.

The hinges with safety switch must be mounted and commissioned by qualified technical personnel in compliance with the details given in the operating instructions and with the national and international rules and regulations and the applicable standards. Otto Ganter GmbH & Co. KG will assume no statutory liability for missing or incorrect information and for any consequences arising therefrom.

Mounting plates

for hinges with safety switch GN 139.1 / GN 139.2

GN 139.3

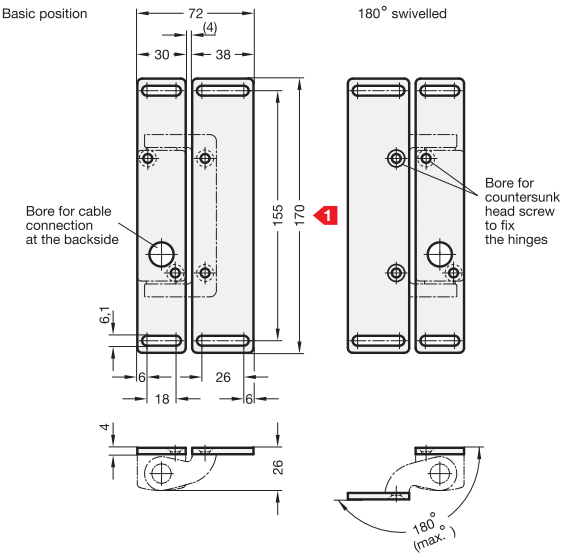

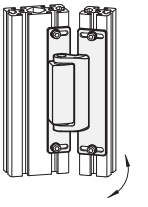

Mounting plate, flat

1

GN 139.3-170

GN 139.4

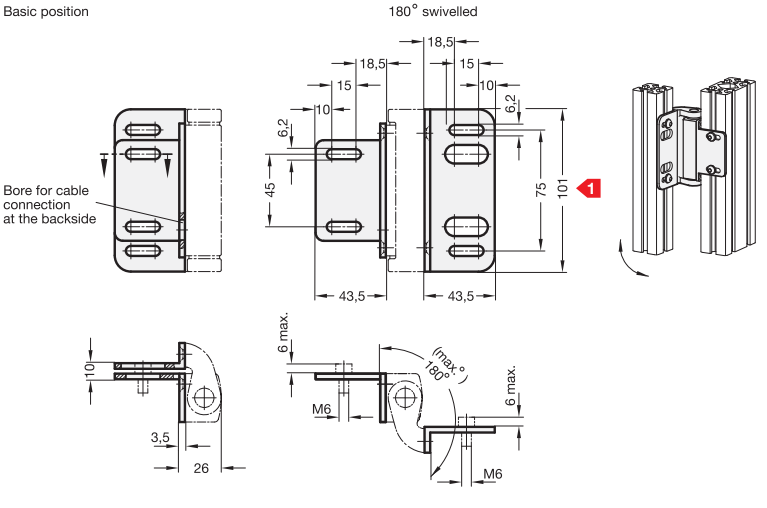

Mounting plate, angled

1

GN 139.4-101

Specification

- **GN 139.3**
  Steel
  zinc plated and plastic coated
  silver metallic
- **GN 139.4**
  Zinc die casting
  plastic coated
  silber metallic
- RoHS compliant

Information

The flat mounting plate GN 139.3 allows the hinges GN 139.1 / GN 139.2 to be attached from the front.

The angled mounting plate GN 139.4 allows the hinges GN 139.1 / GN 139.2 to be attached between frame and door, i.ve. the door gap.

The long slotted holes allow also allow the attachment to profile systems.

Countersunk screws for fixing the hinges to the mounting plate are included part of the order.

see also...

- *Assembly sets for profile systems 30 / 40 GN 965 → Page 149*
- *Assembly sets for profile systems 30 / 40 / 45 GN 968 → Page 157*

GN 237 Hinges

Zinc die casting / Stainless Steel / Aluminium

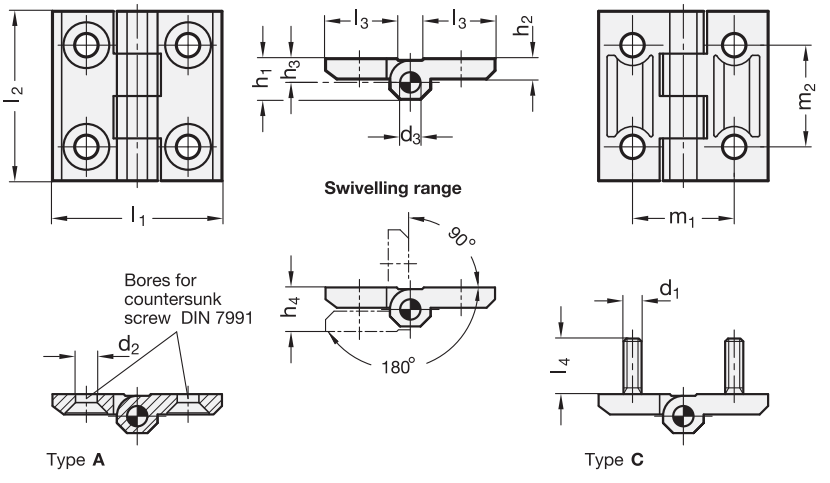

Inox Stainless Steel

4 Form

A 2x2 bores for countersunk screws

C 2x2 threaded studs

2 **3**

l_1	l_2	Material						d_1	d_2	d_3	h_1	h_2	h_3	h_4	l_3		l_4		m_1	m_2
		Type A				Type C								+0,5	ZD, AL	NI, A4	ZD	NI		
30	30	ZD	NI	A4	AL	-	-	-	4,3	3	7,5	4	4,5	8,5	10,7	10,7	-	-	18	18
40	40	ZD	NI	A4	AL	ZD	NI	M 5	5,3	4	9	5	5,5	11	14	16	12	11	25	25
50	50	ZD	NI	A4	AL	ZD	NI	M 6	6,4	6	11,5	6	6,5	13	18,5	21	12	13	30	30
60	60	ZD	NI	A4	AL	ZD	NI	M 8	8,3	8	15	8	8,5	17	21,5	26	14	17	36	36

Specification

1 **5**

- Zinc die casting **ZD**
  plastic coated
  black, RAL 9005, textured finish **SW**
  silver, RAL 9006, textured finish **SR**
- Stainless Steel
  - AISI CF-8 **NI**
  - AISI 316 **A4**
  - matt blasted **GS**
- Aluminium **AL**
  anodized, natural colour **EL**
- Pin
  - Stainless Steel AISI 303 (A2) for ZD
  - Stainless Steel AISI 316Ti (A4) for AL, NI and A4
- Threaded stud (Type C)
  - Stainless Steel AISI 316 for ZD and AL
  - Stainless Steel AISI CF-8 for NI, casted „in one piece“
- *Stainless Steel characteristics → Page 334*
- *Load rating information → Page 348*
- RoHS compliant

Information

see also...

- *Hinges GN 337 (detachable) → Main Catalogue Page 877*
- *Hinges GN 238 (adjustable) → Main Catalogue Page 880*

Hinge

1 **2** **3** **4** **5**

GN 237-ZD-60-60-A-SR

1	Material
2	l_1
3	l_2
4	Type
5	Finish

Stainless Steel-Hinge

1 **2** **3** **4** **5**

GN 237- NI -40-40-C- GS

1	Material
2	l_1
3	l_2
4	Type
5	Finish

GN 2370 Stainless Steel-Spacer plates

for hinges GN 237, GN 237.1, GN 337 and GN 337.1

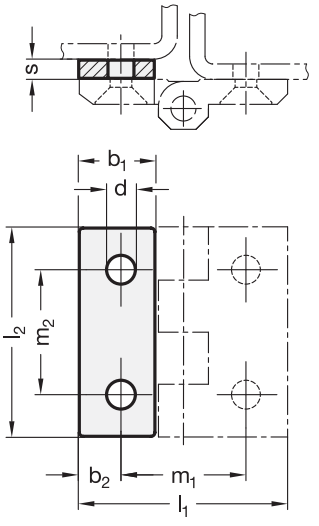

Rost frei Inox Stainless Steel

2 l_2	3 s				b_1	b_2	d	l_1	m_1	m_2
30	1	1,5	3	5	10,8	6	4	30	18	18
40	1	1,5	3	5	14,5	7,5	5	40	25	25
50	1	1,5	3	5	18	10	6	50	30	30
60	1	1,5	3	5	21,5	12,5	8	60	36	36

Specification

1 4

- Stainless Steel **NI**
  - AISI 304
  - plain, matte tumbled finish **MT**
- *Stainless Steel characteristics → Page 334*
- RoHS compliant

Information

Chamfers, different sheet metal thicknesses or seals could mean that Stainless Steel-Spacer plates GN 2370, as accessories of the GN 237 family of hinges, are designed dimensionally so that they ensure the appropriate height compensation during mounting by shimming, either individually or in combination.

see also...

- *Hinges GN 237 → Page 259*
- *Hinges GN 237.1 (Plastic) → Main Catalogue Page 882*
- *Hinges GN 337 (detachable) → Main Catalogue Page 877*

The table includes a number of potential compensation heights which can be accomplished by shimming with one or two spacer plates.

Height compensation	Plate thickness **s**	Height compensation	Plate thickness **s**
1	1	4,5	3 + 1,5
1,5	1,5	5	5
2	1 + 1	6	3 + 3
2,5	1 + 1,5	6,5	5 + 1,5
3	3	8	5 + 3
4	3 + 1	10	5 + 5

How to order

1 2 3 4

GN 2370-NI-40-5-MT

1	**Material**
2	l_2
3	**s**
4	**Finish**

GN 2372 Stainless Steel-Plates with tapped holes

for hinges GN 237, GN 237.1, GN 337 and GN 337.1

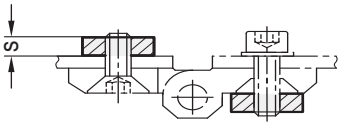

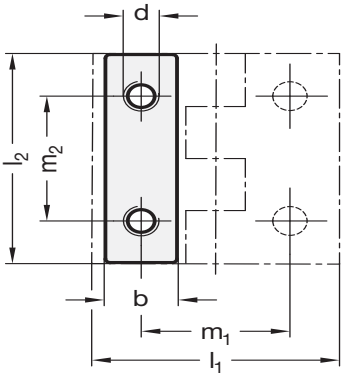

Application example

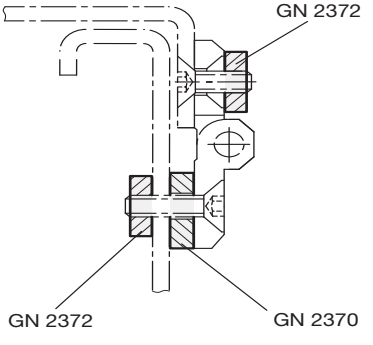

Rost frei Inox Stainless Steel

2						
l_2	b	d	l_1	m_1	m_2	s
30	9	M 4	30	18	18	3
40	12	M 5	40	25	25	3
50	15	M 6	50	30	30	4
60	18	M 8	60	36	36	4

Specification

	1	3
• Stainless Steel	NI	
- AISI 304		
- matt, tumbled finish		MT

• *Stainless Steel characteristics* → *Page 334*

• RoHS compliant

Information

Dimensionally, Stainless Steel-Plates with tapped holes GN 2372 are designed as accessories for the GN 237 family of hinges, eliminating the need for nuts and washers for mounting.

Meanwhile, there is no need for the time-consuming pre-assembly of washer and nuts or for counterholding during tightening. Mounted to the top side of the hinge, the plate offers entirely new assembly options.

see also...

• *Hinges GN 237* → *Page 259*

• *Hinges GN 237.1 (Plastic)* → *Main Catalogue Page 882*

• *Hinges GN 337 (detachable)* → *Main Catalogue Page 877*

How to order		
1 2 3	1	Material
GN 2372-NI-40-MT	2	l_2
	3	Finish

GN 138 Hinges

Zinc die casting

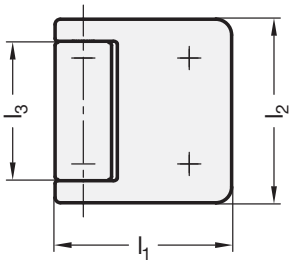

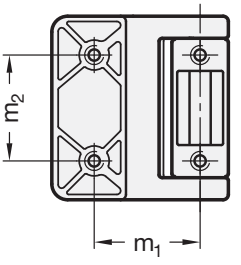

4 Type

A 2x2 threaded blind bores

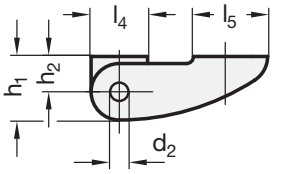

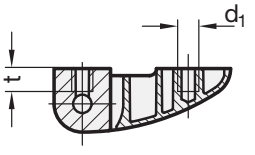

Swivelling range

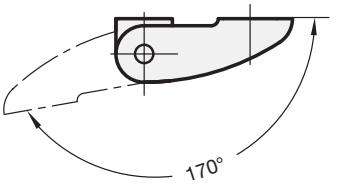

2 l_1	3 l_2	d_1	d_2	h_1	h_2	l_3	l_4	l_5	m_1	m_2	t
40	42	M 5	6	14	8	34	12	18	25	25	5
50	52	M 6	6	18	10	39	16	21	30	30	6,5
60	62	M 6	8	22	12	47	20	24	36	36	7,5

Specification

1 5

- Zinc die casting ZD
  plastic coated
  black, RAL 9005, textured finish ● SW
  silver, RAL 9006, textured finish ○ SR
- Pin
  Stainless Steel AISI 303
- *Stainless Steel characteristics → Page 334*
- RoHS compliant

Information

With their attractive design, hinges GN 138 are suitable for use in plant and machinery where a well-designed and stylish appearance is important.

The concealed and tamper-proof mounting from the rear highlights and enhances the special appearance of the hinge.

The dimensions l_1 / l_2 and the drill hole spacings m_1 / m_2 match the usual hinges GN 237 / GN 237.1 and can replace these.

see also...

- *Hinges GN 238 → Main catalogue Page 880*
- *Hinge GN 139.2 → Page 254*

How to order

1 2 3 4 5

GN 138-ZD-50-52-A-SR

1	Material
2	l_1
3	l_2
4	Type
5	Colour

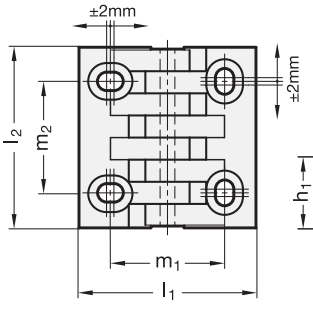

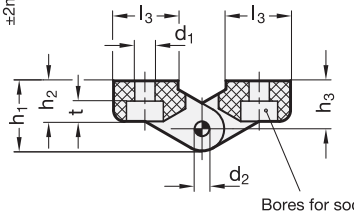

Bores for socket head cap screw DIN 912 - M6

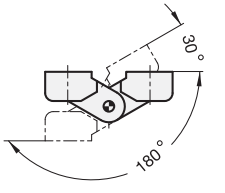

ELESA original design CFA/SL

3 Type

H	horizontal adjustable
B	vertical adjustable
HB	vertical and/or horizontal adjustable

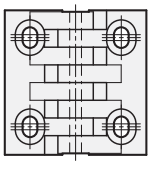

Type **H**

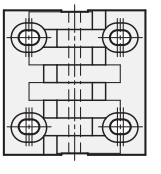

Type **B**

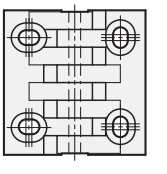

Type **HB**

1 l_1	2 l_2	d_1	d_2	h_1	h_2	h_3	l_3	m_1	m_2	t
64	65	6,5	5	23	13,5	15	24	40	40	6,5

Specification

- Plastic (Polyamide PA)
  - black, matt
  - temperature resistant up to 80 °C
- Pin
  Stainless Steel
  German Material No. 1.4305
- *Plastic characteristics* → *Page 331*
- *Load rating information* → *Page 346*
- RoHS compliant

Information

see also...

- *Assembly sets for profile systems 30 / 40 GN 965* → *Page 144*
- *Assembly sets for profile systems 30 / 40 / 45 GN 968* → *Page 152*

How to order

1 2 3

GN 151.4-64-65-HB

1	l_1
2	l_2
3	**Type**

GN 437 Hinges

with adjustable friction / zinc die casting

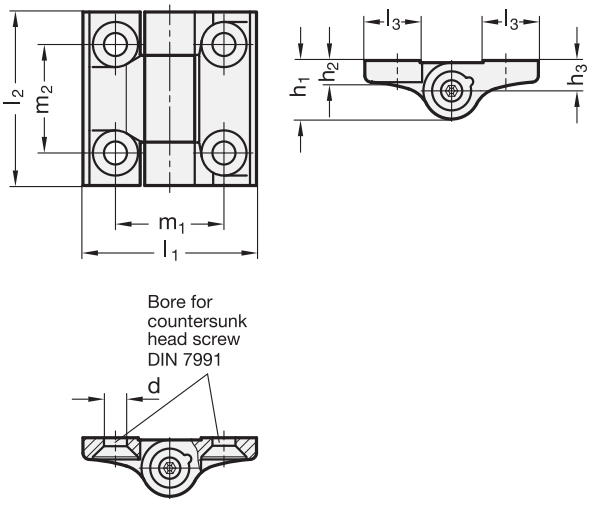

4 Type

A 2x2 bores for countersunk head screw

2 l_1	3 l_2	d	h_1	h_2	h_3	h_4	l_3	m_1	m_2	A/F	max. recommended tightening torque of the set screw in Nm	Friction torque in Nm ≈
40	40	5,3	13,5	5	7	14	13	25	25	2,5	0,5	2
50	50	6,5	15,5	6	8	16	16,5	30	30	3	0,75	4
60	60	8,3	18,5	7,5	9,5	19	20	36	36	4	1,5	6,5

Specification

1 5

- Zinc die casting ZD
  plastic coated
  black, RAL 9005, textured finish SW
  silver, RAL 9006, textured finish SR
- Friction cone
  Plastic (Polyacetal POM)
  temperature resistant up to 80 °C
- Set screw / Hexagon nut
  Steel
  zinc plated, blue passivated
- *Plastic characteristics → Page 331*
- RoHS compliant

Information

The setscrew in the hinges GN 437 allows the mobility of the hinge to be changed. This also generates a constant braking torque adjustable across the whole of the rotating range. The rotation of doors and flaps is so inhibited, also preventing the inadvertent movement.

The friction torque is accomplished by interlocking two slim friction cones. The large friction surface and the hard-wearing plastic of the friction cones guarantee a long service life with virtually constant stiffness.

Owing to the structure and the prestress of the friction cones, the hinge has virtually no radial play and no play at all in axial direction.

How to order

1 2 3 4 5
GN 437-ZD-60-60-A-SR

1	Material
2	l_1
3	l_2
4	Type
5	Finish

Swivelling range

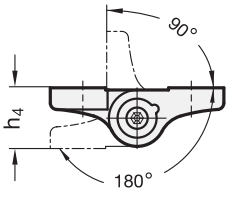

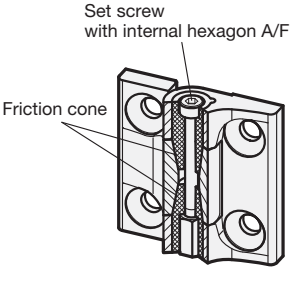

Load rating

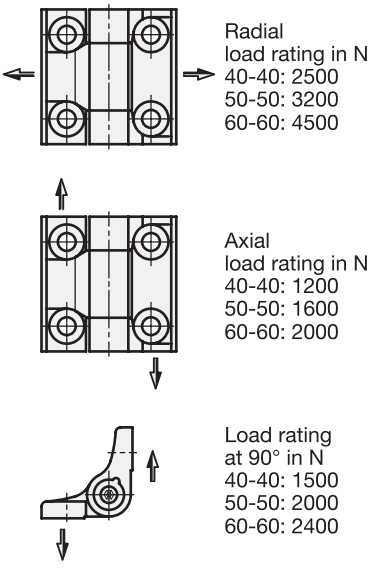

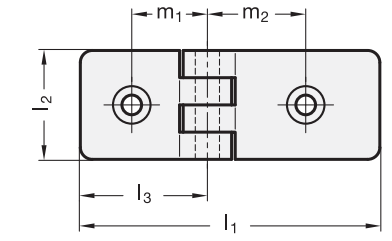

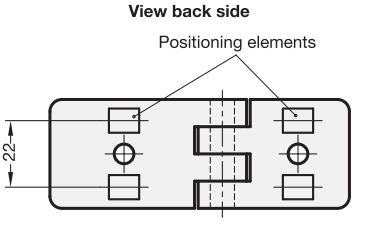

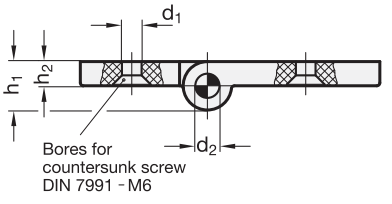

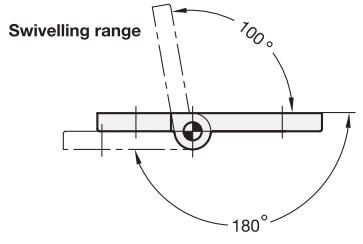

ELESA original design CFG.

1 l_1	2 m_1	3 m_2	d_1	d_2	h_1	h_2	l_2	l_3	for profile widths s_1 - s_2
54	17,5	17,5	6,5	8	16	8	36	27	30 - 30
64	17,5	22,5	6,5	8	16	8	36	27	30 - 40
69	17,5	25	6,5	8	16	8	36	27	30 - 45
84	17,5	32,5	6,5	8	16	8	36	27	30 - 60
74	22,5	22,5	6,5	8	16	8	36	37	40 - 40
79	22,5	25	6,5	8	16	8	36	37	40 - 45
94	22,5	32,5	6,5	8	16	8	36	37	40 - 60
84	25	25	6,5	8	16	8	36	42	45 - 45
99	25	32,5	6,5	8	16	8	36	42	45 - 60
114	32,5	32,5	6,5	8	16	8	36	57	60 - 60

Specification

4

- Plastic (Polyamide PA)
  - black, matt ● SW
  - grey, matt ○ LG
  - temperature resistant up to 130 °C
- Pin
  Steel nickel plated
- *Plastic characteristics → Page 331*
- RoHS compliant

Information

Hinges GN 159 are suitable for simple installation on standard commercially available extrusions to support the weight of a door by utilising the enclosed rectangular positioning elements.

For every profile combination s_1 - s_2, the positioning elements in the commercial groove widths b are included.

see also...

- *Hinges GN 161 (Zinc die casting) → Main Catalogue Page 886*
- *T-Nuts for profile systems → Page 144/152*
- *Assembly sets for profile systems 30 / 40 GN 965 → Page 144*
- *Assembly sets for profile systems 30 / 40 / 45 GN 968 → Page 152*

How to order

1 2 3 4
GN 159-84-17,5-32,5-SW

1	l_1
2	m_1
3	m_2
4	Colour

Positioning elements

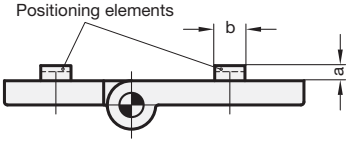

Profile width	b Nut width	a
30	6	2
30	8	2
40 and 45	8	4
40 and 45	10	4
60	10	5
60	12	5

The positioning elements are clipped into the corresponding recesses of the hinge wing.

Application example

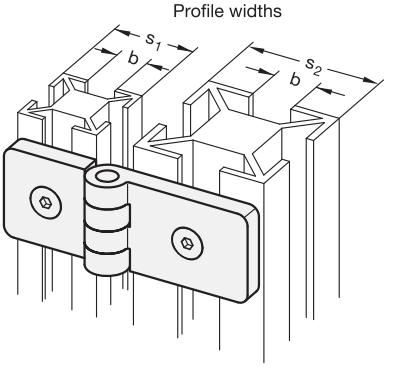

GN 159.1 Double hinges

Accessory for profile systems / Plastic

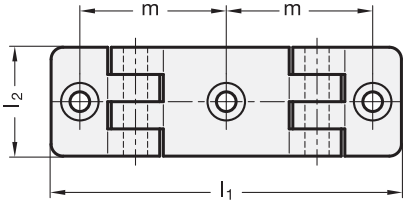

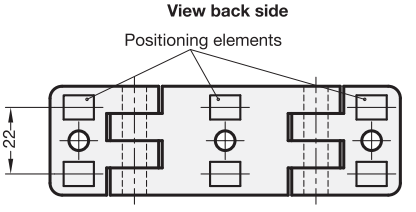

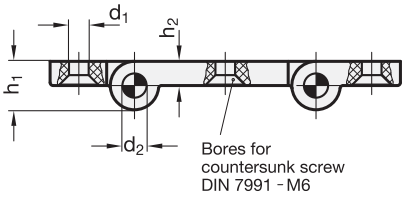

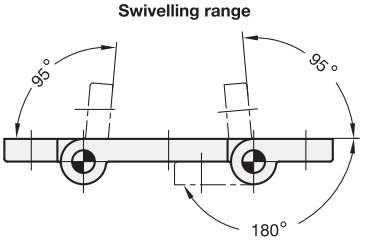

ELESA Original design CFI.

1 l_1	2 m	d_1	d_2	h_1	h_2	l_2	for slot width s_2 - s_1 - s_2
89	35	6,5	8	16	8	36	30 - 30 - 30
109	40	6,5	8	16	8	36	40 - 30 - 40
99	40	6,5	8	16	8	36	30 - 40 - 30
119	45	6,5	8	16	8	36	40 - 40 - 40
104	42,5	6,5	8	16	8	36	30 - 45 - 30
124	47,5	6,5	8	16	8	36	40 - 45 - 40
134	50	6,5	8	16	8	36	45 - 45 - 45
119	50	6,5	8	16	8	36	30 - 60 - 30
139	55	6,5	8	16	8	36	40 - 60 - 40
149	57,5	6,5	8	16	8	36	45 - 60 - 45

Specification

3

- Plastic (Polyamide PA)
  - black, matt ● SW
  - grey, matt ○ LG
  - temperature resistant up to 130° C
- Pin
  Steel, nickel-plated
- *Plastic characteristics → Page 331*
- RoHS compliant

Information

Double hinges GN 159.1 are suitable for simple installation on standard commercially available extrusions to support the weight of a door by utilising the enclosed rectangular positioning elements.

For every profile combination s_2 - s_1 - s_2, the positioning elements in the commercial groove widths b are included.

see also...

- *T-Nuts for profile systems → Page 144 / 152*
- *Assembly sets for profile systems 30 / 40 GN 965 → Page 144*
- *Assembly sets for profile systems 30 / 40 / 45 GN 968 → Page 152*

How to order

1 2 3

GN 159.1-119-45-LG

1	l_1
2	m
3	Colour

Positioning elements

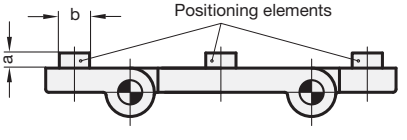

Profile width	b Nut width	a
30	6	2
30	8	2
40 and 45	8	4
40 and 45	10	4
60	10	5
60	12	5

The positioning elements are clipped into the corresponding recesses of the hinge wing.

Application example

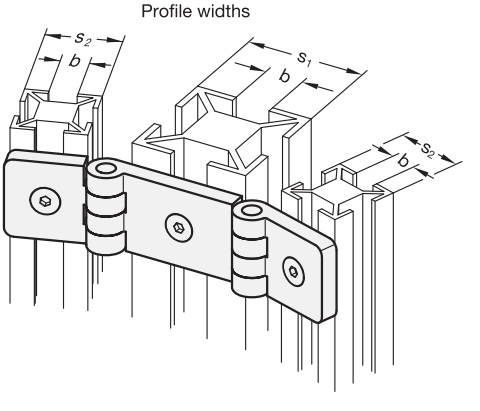

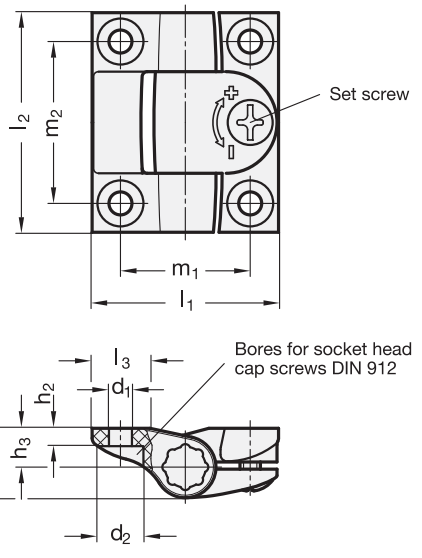

ELESA original design CFU.

CLEAN

1 l_1	2 l_2	d_1	d_2	h_1	h_2	h_3	l_3	m_1 ±0,25	m_2 ±0,25	max. friction torque in Nm
37	43	4,5	9	14	3,5	7,5	11,5	25,5	31,7	1,4
57	64	6,5	12,5	21	6,5	11,5	17,5	38	47,5	4

Specification

3

- Plastic (Polyacetal POM)
  - temperature resistant up to 65 °C
  - Colour (matt):
    black, RAL 9005 ● SW
    white, RAL 9002, Cleanline ○ CL
- Pin
  Plastic (Polycarbonate PC)
  - black
- Set screw
  Stainless Steel
  German Material No. 1.4305
- *Stainless Steel characteristics* → *Page 334*
- *Plastic characteristics* → *Page 331*
- *Load rating information* → *Page 346*
- RoHS compliant

Information

The actuating torque of the hinges GN 233 can be adjusted via a set screw, allowing doors and flaps to be kept open or partially open or closed.

Endurance tests have shown that the friction torque has not changed even after 60.000 opening / closing cycles (at 0.8 Nm tightening torque of the setscrew).

The hinges comply with flammability category UL 94-HB.

see also...
- *Product family Cleanline* → *Main Catalogue Page 13*

How to order
1 2 3
GN 233-37-43-CL

1	l_1
2	l_2
3	Colour

Swivelling range

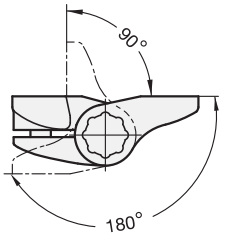

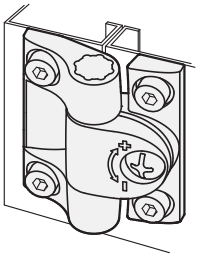

Load bearing capacity

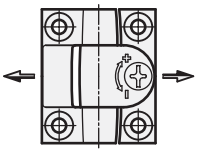

Radial load bearing capacity in N
37-43: 1400 (1800)
57-64: 2250 (3200)

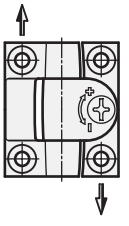

Axial load bearing capacity in N
37-43: 700 (1100)
57-64: 1500 (2350)

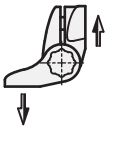

Load bearing capacity at 90° in N
37-43: 500 (1000)
57-64: 1500 (2500)

The values given in (...) are the failure loads, serving to estimate the safety coefficient.

GN 129.2
Steel / Stainless Steel

Hinges
consisting of three parts

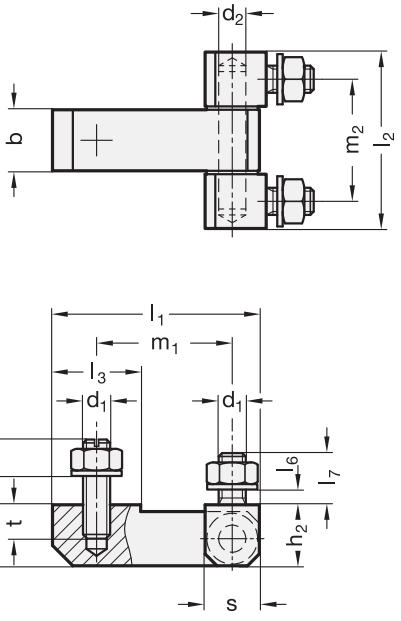

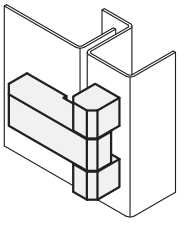

Inox Stainless Steel

3 Type

C Fixing from the back side

1 l_1 ST	l_1 NI / A4	2 l_2 ST	l_2 NI / A4	b	d_1	d_2 Pin	h_1	h_2	l_3	l_4 max.	l_5	l_6 max.	l_7	m_1	m_2	s	t
45	45	40	40	13	M 6	6	13	13,5	18	6	11	5	10	30	28,2	12	9
50	50	51	51	18	M 8	8	18	18	26	8	14	8	14	29	35	16	11
53	-	40	-	13	M 6	6	13	13,5	26	6	11	5	10	38	28,2	12	9
61	-	51	-	18	M 8	8	18	18	26	8	14	8	14	40	35	16	11

Specification

4

- Hinge
  Steel
  zinc plated, blue passivated **ST**
  - Pin
    Brass, nickel plated
  - Washer
    Brass, nickel plated
  - Hexagon nut ISO 4032
    Steel zinc plated, blue passivated
  - Serrated washer DIN 6797
    for securing screws
    Steel zinc plated, blue passivated
- Hinge body, pin, washer
  - Stainless Steel AISI 303 **NI**
  - Stainless Steel AISI 316L **A4**
  - Hexagon nut ISO 4032
    Stainless Steel AISI 304
  - Serrated washer DIN 6797
    for securing screws
    Stainless Steel AISI 304
- *Stainless Steel characteristics → Page 334*
- RoHS compliant

Information

Hinges GN 129.2 are used for doors which are flush with the frame on the outside. Once assembled, they cannot be unhinged.

With the fixing from the inside, they are especially suitable for doors and trap doors which must not be detachable from the outside as an anti-tamper device.

see also...

- *Hinges GN 129 → Main catalogue Page 893*
- *Stainless Steel Hinges GN 129.5 → Page 274*

How to order

1 2 3 4
GN 129.2-53-40-C-ST

1	l_1
2	l_2
3	Type
4	Material

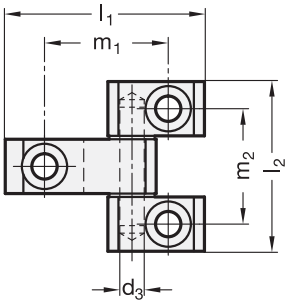

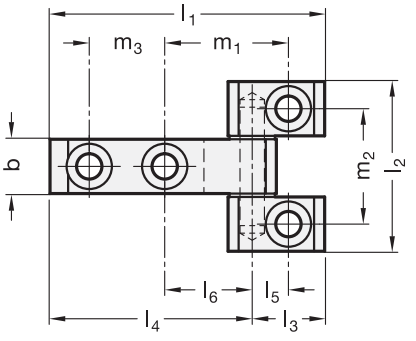

3 Type
A Fixing from the front side

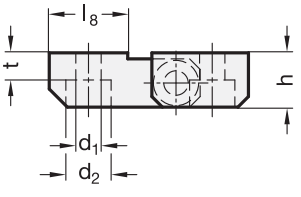

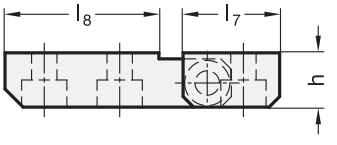

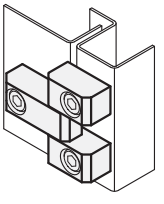

1 l_1	2 l_2	b	d_1	d_2	d_3 Pin	h	l_3	l_4 max.	l_5	l_6 max.	l_7	l_8	m_1	m_2	m_3	t
66	55	18	8,4	15	8	18	24	42	12	29	32	26	41	37	-	9
91	55	18	8,4	15	8	18	24	67	12	29	32	51	41	37	25	9

Specification

4

- Steel **ST**
  zinc plated, blue passivated
- Pin
  Brass, nickel plated
- Washer
  Brass, nickel plated
- RoHS compliant

Information

Hinges GN 129.3 are used for doors which are flush with the frame on the outside. Once assembled, they cannot be unhinged.

By using cylinder screws DIN 912, they are conveniently fixed using threads on the user side or by using through screws for different clamping thicknesses.

see also...
- *Hinges GN 129 → Main Catalogue Page 893*
- *Stainless Steel-Hinges GN 129.5 → Page 274*

How to order

1 2 3 4
GN 129.3-66-55-A-ST

1	l_1
2	l_2
3	Type
4	Material

GN 129.5 Stainless Steel-Hinges

consisting of three parts

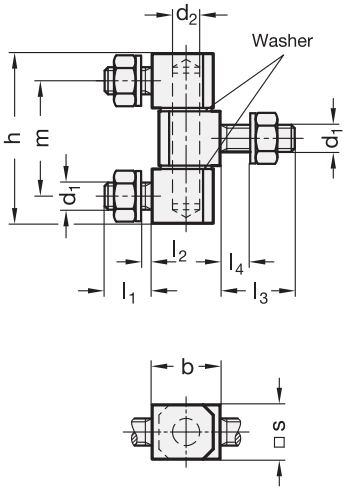

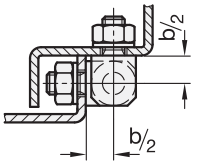

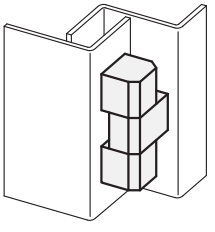

Inox Stainless Steel

2 Type

D consisting of three parts

1

s Square	b	d_1	d_2 Pin	h	l_1	l_2	l_3	l_4 max.	m
12	15	M 6	6	39,2	10	5	14	9	27,2
16	20	M 8	8	49	14	8	22	16	33

Specification

3

- Hinge body, pin, washer
  - Stainless Steel AISI 303 **NI**
  - Stainless Steel AISI 316L **A4**
- Hexagon nut ISO 4032
  Stainless Steel AISI 304
- Serrated washer DIN 6797
  for securing screws
  Stainless Steel AISI 304
- Stainless Steel characteristics → *Page 334*
- RoHS compliant

Information

Stainless Steel-Hinges GN 129.5 are used for doors which are flush with the frame on the outside. Once assembled, they cannot be unhinged.

With the fixing from the inside, they are especially suitable for doors and trap doors which must not be detachable from the outside as an anti-tamper device.

see also...

- *Hinges GN 129 (Steel) → Main catalogue page 893*
- *Hinges GN 129.2 (Steel / Stainless Steel) → Page 272*
- *Hinges GN 129.3 (Steel) → Page 273*

How to order		
GN 129.5-16-D-A4 (1 2 3)	1	s
	2	Type
	3	Material

Oil level sight glasses

Aluminium / Natural glass

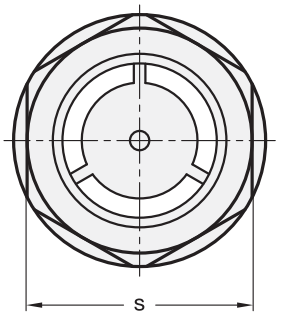

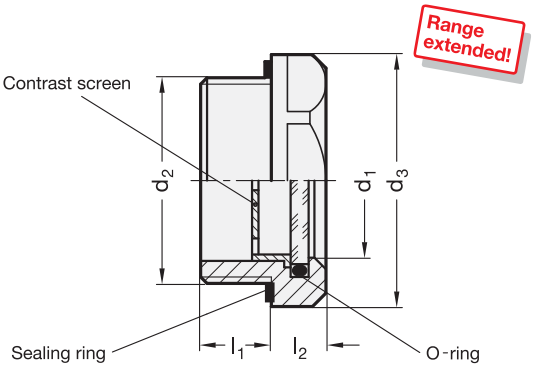

3 Type

A with contrast screen
B without contrast screen

1 d1	2 d2			d3	l1	l2	s
7	G ¼	M 14 x 1,5	-	20	7,5	6,5	18
11	G ⅜	M 16 x 1,5	-	22	8	7,5	20
14	G ½	M 20 x 1,5	-	26	8,5	7,5	23
18	G ¾	M 26 x 1,5	M 27 x 1,5	32	9	8	30
24	G 1	M 33 x 1,5	-	40	11	8,5	36
32	G 1¼	M 40 x 1,5	M 42 x 1,5	50	12	9	46
32	G 1½	-	-	60	13	9	55

Specification

- Body
  Aluminium
  fine turned
- Contrast screen
  Technopolymer (Polysulfon)
- **GN 743**
  - temperature resistant up to **100 °C**
  - Sight glass Float-glass
  - Sealing ring rubber NBR (Perbunan)
- **GN 743.1**
  - temperature resistant up to **180 °C**
  - Sight glass ESG-glass
  - Sealing ring rubber FPM (Viton®)
    Identification by not black finish of the sealing ring
- *Elastomer characteristics* → *Page 330*

Accessory

- Fixing nut GN 543.1
  → *Main Catalogue Page 910*

On request

- EPDM seal

Information

Oil level sight glasses GN 743 / GN 743.1 offer genuine glass of high stability and scratch proof. The sealing is achieved with an O-ring on the **periphery** and not on the face edge of the glass. Leak tightness is therefore not affected by axial pressures.

The outside diameter of these oil level sight glasses with recessed hexagon is chosen to match mounting holes for tube connections according to DIN 3852.

The seal is housed in a groove and it can therefore not be lost. In addition, this groove prevents the seal from being extruded when the sight glass is tightened.

Oil level sight glasses GN 743 / GN 743.1 can be used on pressurised oil tanks. Tests regarding maximum pressure are available on request.

Assembly instruction:

For mounting on walls of less than 4 mm thickness please use a fixing nut GN 543.1.

see also...

- *Stainless Steel-Oil level sight glasses GN 743.5* → *Page 276*
- *ATEX-Sight glasses GN 743.6* → *Main Catalogue Page 905*

Oil level sight glass, NBR seal
1 2 3
GN 743-32-M40x1,5-A

1	d_1
2	d_2
3	Type

Oil level sight glass, Viton seal
1 2 3
GN 743.1-18-G¾-B

1	d_1
2	d_2
3	Type

GN 743.4 / GN 743.5 Stainless Steel-Oil level sight glasses

GN 743.4 up to 100 °C | GN 743.5 up to 180 °C

Natural glass

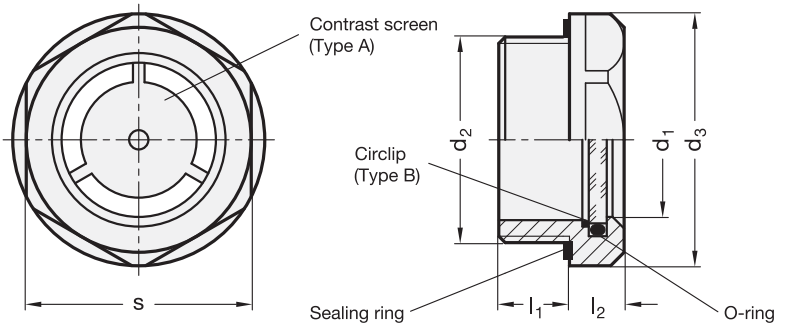

Range extended!

Rostfrei – Inox Stainless Steel

3 Type

A with contrast screen

B without contrast screen

1 d_1	2 d_2		d_3	l_1	l_2	s
11	G 3/8	M 16 x 1,5	22	8	7,5	20
14	G 1/2	M 20 x 1,5	26	8,5	7,5	23
18	G 3/4	M 26 x 1,5	32	9	8	30
24	G 1	M 33 x 1,5	40	11	8,5	36
32	G 1 1/4	M 42 x 1,5	50	12	9	46

Specification

- Body
  Stainless Steel AISI 303
- Contrast screen (Type A)
  Technopolymer (Polysulfan)
- Circlip (Type B)
  Stainless Steel AISI 301
- **GN 743.4**
  - temperature resistant up to **100° C**
  - Sight glass Float-glass
  - Sealing ring rubber NBR (Perbunan®)
- **GN 743.5**
  - temperature resistant up to **180° C**
  - Sight glass ESG-glass
  - Sealing ring rubber FPM (Viton®)
    Identification by not black finish of the sealing ring
- *Elastomer characteristics* → *Page 330*
- *Stainless Steel characteristics* → *Page 334*
- RoHS compliant

On request

- EPDM seal

Information

Stainless Steel-Oil level sight glasses GN 743.4 / GN 743.5 offer genuine glass of high stability and scratch proof. The sealing is achieved with an O-ring on the **periphery** and not on the face edge of the glass. Leak tightness is therefore not affected by axial pressures.

The outside diameter of these oil level sight glasses with recessed hexagon is chosen to match mounting holes for tube connections according to DIN 3852.

The seal is housed in a groove and it can therefore not be lost. In addition, this groove prevents the seal from being extruded when the sight glass is tightened.

Stainless Steel-Oil level sight glasses GN 743.4 / GN 743.5 can be used on pressurised oil tanks. Tests regarding maximum pressure are available on request.

see also...

- *Oil level sight glasses GN 743 / GN 743.1 (Alu-Body)* → *Page 275*
- *Oil level sight glasses GN 743.2 / GN 743.3 (Brass-Body)* → *Main Catalogue Page 903*

Stainless Steel-Oil level sight glass		
1 2 3	1	d_1
GN 743.4-14-G½-A	2	d_2
	3	Type

Stainless Steel-Oil level sight glass		
1 2 3	1	d_1
GN 743.5-24-G1-B	2	d_2
	3	Type

GN 650.4 Oil level indicators

narrow shape

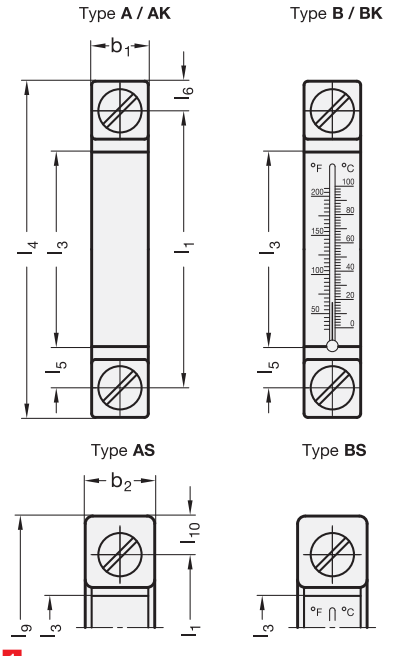

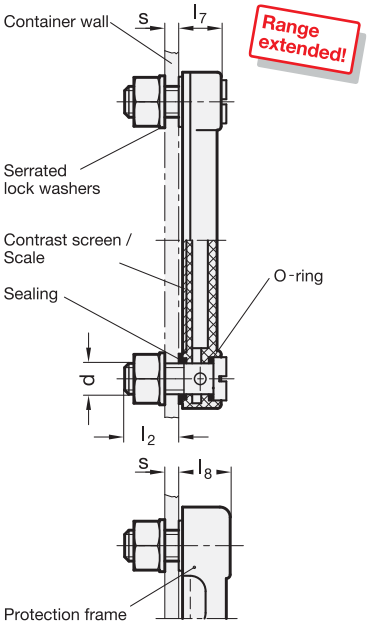

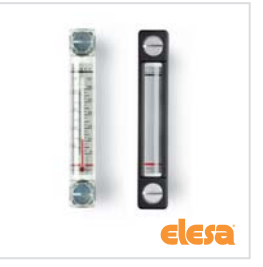

ELESA Original design HCZ. / HCZ-VT

2 Type

- **A** without thermometer, without protection frame
- **B** with thermometer, without protection frame
- **AK** without thermometer, without protection frame, with plastic screws
- **BK** with thermometer, without protection frame, with plastic screws
- **AS** with thermometer, with protection frame
- **BS** with thermometer, with protection frame

1

l_1	b_1	b_2	d		l_2	l_3	l_4	l_5	l_6	l_7	l_8	l_9	l_{10}	s ≈	Thermometer scale	
			Type A / AS Type B / BS	Type AK Type BK										max. wall thickness	°C	°F
76	22	27	M 10	M 12	23	40	99	18	11,5	15	17,5	105	14,5	12	20 ... 100	68 ... 210
127	22	27	M 12	M 12	23	80	150	23	11,5	15	17,5	156	14,5	10	0 ... 100	32 ... 210
254	22	27	M 12	M 12	23	203	278	23	12	15	17,5	284	15	10	0 ... 100	32 ... 210

Specification

- Body
  Plastic
  crystal-clear Polyamide (PA 6-T)
  - ageing resistant
  - high mechanical strength
  - temperature resistant up to 90 °C
  - solvent resistant, but not suitable for alcohol
  - avoid contact with hot water
- Protection frame
  Plastic (Polyamide PA)
  glass fibre reinforced, black, matt
- Contrast screen Aluminium
  - white lacquered
  - with two black marking lines / scale
- O-ring rubber NBR (Perbunan)
- Set screw / nut
  - Type A / B / AS / BS: Steel, zinc plated, blue passivated
  - Type AK /BK: Plastic (PA) glass fibre reinforced, black matt Tightening torque max. 6 Nm
- RoHS compliant

Information

A special feature of oil level indicators GN 650.4 is their reduced dimension. The liquid level is visible even from side positions.

The polyamide body consists of two parts which are ultrasonically welded together. The oil level indicators are individually air pressure tested for leaks at 3 bar.

All oil level indicators GN 650.4 can also be used on tanks which are pressurised. Pressure test results regarding resistance under pressure are available.

As a contrast screen, a white lacquered aluminium strip is used which shows marking lines or temperature scale.

The scale is placed behind and outside the liquid column as a protective measure.

The protection frame is designed to increase the resistance of the indicator by absorbing all shocks. The protection frame is mounted to the indicator.

How to order		
GN 650.4-127-A (1 2)	1	l_1
	2	Type

DIN 908 Threaded plugs

Steel, zinc plated

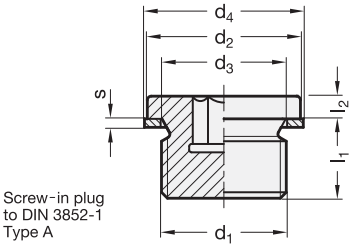

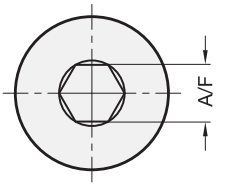

3 Type

A without gasket
AC with gasket in copper
AA with gasket in aluminium

2

d_1 metr. thread	Tube thread	d_2 h14	d_3	d_4 Gasket Outside-Ø	l_1 ±0,2	l_2 +0,5	s	A/F
M 8 x 1	-	12	8,3	11,5	8	3	1	4
M 10 x 1	-	14	10,3	13,5	8	3	1	5
-	G 1/8	14	10	13,5	8	3	1	6
M 12 x 1,5	-	17	12,3	16	12	3	1,5	6
-	G 1/4	18	13,4	18	12	3	1,5	6
M 14 x 1,5	-	19	14,3	18	12	3	1,5	6
M 16 x 1,5	-	21	16,3	20	12	3	1,5	8
-	G 3/8	22	17	21	12	3	1,5	8
M 18 x 1,5	-	23	18,3	22	12	4	1,5	8
M 20 x 1,5	-	25	20,3	24	14	4	1,5	10
-	G 1/2	26	21,3	26	14	4	1,5	10
M 22 x 1,5	-	27	22,3	27	14	4	1,5	10
M 24 x 1,5	-	29	24,3	29	14	4	2	12
M 26 x 1,5	-	31	26,3	31	16	4	2	12
M 27 x 2	-	32	27,3	32	16	4	2	12
-	G 3/4	32	26,7	32	16	4	2	12
M 30 x 1,5	-	36	30,3	36	16	4	2	17
M 33 x 2	-	39	33,3	39	16	5	2	17
-	G 1	39	33,5	39	16	5	2	17
M 42 x 2	-	49	42,3	49	16	5	2	22
-	G 1 1/4	49	42,2	49	16	5	2	22
M 48 x 2	-	55	48,3	55	16	5	2	24
-	G 1 1/2	55	48,1	55	16	5	2	24

Specification

1

- Steel **ST**
  - Tensile strength class 5.8 (500 N/mm²)
  - ultrasonically and tensile tested
  - zinc plated, nano-passivated (silver / yellowish)
- RoHS compliant

On request

- Stainless Steel version (NI)

Information

The gaskets in types AC and AA correspond to the gaskets DIN 7603, type A (flat gaskets).

see also...

- *Threaded plugs GN 749 (with rubber seal)* → *Main Catalogue Page 920*

How to order

1 **2** **3**

DIN 908-ST-M24x1,5-A

1	**Material**
2	**d_1**
3	**Type**

DIN 7603 Gaskets

Metal, for threaded plugs DIN 908

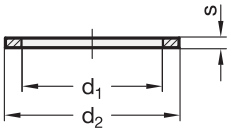

4 Type

A Flat gasket

2 d_1		3 d_2		**s** ±0,2	suitable for DIN 908	
Nominal dimension	Actual dimension +0,3	Nominal dimension	Actual dimension -0,2		metr. thread	Tube thread
8	8,2	11,5	11,4	1	M 8 x 1	-
10	10,2	13,5	13,4	1	M 10 x 1	G 1/8
12	12,2	16	15,9	1,5	M 12 x 1,5	-
14	14,2	18	17,9	1,5	M 14 x 1,5	G 1/4
16	16,2	20	19,9	1,5	M 16 x 1,5	-
17	17,2	21	20,9	1,5	-	G 3/8
18	18,2	22	21,9	1,5	M 18 x 1,5	-
20	20,2	24	23,9	1,5	M 20 x 1,5	-
21	21,2	26	25,9	1,5	-	G 1/2
22	22,2	27	26,9	1,5	M 22 x 1,5	-
24	24,3	29	28,9	2	M 24 x 1,5	-
26	26,3	31	30,9	2	M 26 x 1,5	-
27	27,3	32	31,9	2	M 27 x 2	G 3/4
30	30,3	36	35,9	2	M 30 x 1,5	-
33	33,3	39	38,9	2	M 33 x 2	G 1
42	42,3	49	48,9	2	M 42 x 2	G 1 1/4
48	48,3	55	54,9	2	M 48 x 2	G 1 1/2

Specification

1

- Copper **CU**
  Aluminium **AL**
- RoHS compliant

On request

- other sizes
- other materials
- other types

Information

The gaskets listed in this standard sheet are only an extract of DIN 7603.

They are used in connection with threaded plugs DIN 908.

How to order

1 2 3 4

GN 7603-CU-20-24-A

1	**Material**
2	**d_1**
3	**d_2**
4	**Type**

Type **A**

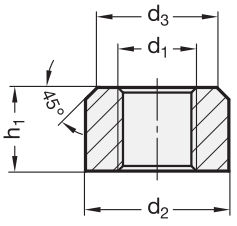

Type **B**

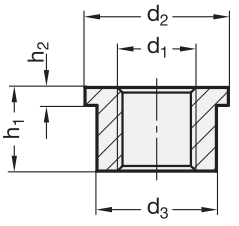

Example of application

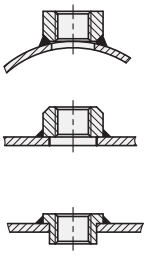

3 Type

A with chamfer
B with collar

2

d_1	d_2	d_3	h_1	h_2
G ⅛	20	16	10	3
G ¼	24	20	14	3
G ⅜	28	22	14	4,5
G ½	32	26	16	4,5
G ¾	40	32	18	6
G 1	50	40	20	7,5
G 1¼	60	50	22	7,5
G 1½	65	55	24	7,5

Specification

1

- Steel **ST**
  - weldable
  - turned
  - blank
- RoHS compliant

On request

- Stainless Steel-Welding sockets
- metric threads

Information

Welding sockets GN 7490 are used in container construction or in hydraulics for mounting instruments such as oil level sight glasses or locking caps.

The plane surfaces are machined, with the effect that they can be used as sealing surface in connection with a sealing element or compound.

The favourably dimensioned wall thickness prevents deformation or burn-through during welding.

Type B is used if exact positioning through the mounting bore or a low construction height is required.

How to order

1 **2** **3**

GN 7490-ST-G1/2-B

1	**Material**
2	**d_1**
3	**Type**

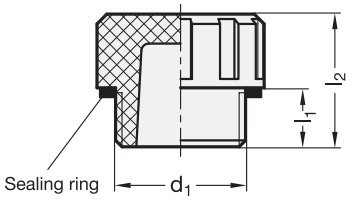

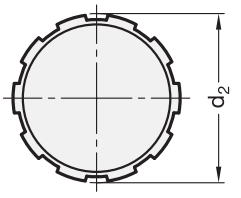

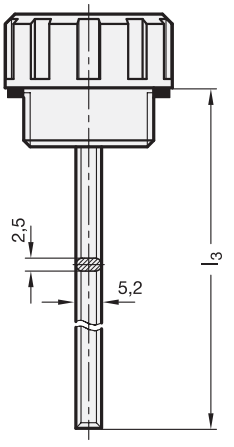

ELESA Original design T.440

2 Type

A without dipstick
B with dipstick

1

d_1	d_2	l_1	l_2	l_3
G ¼	20,5	9	19	192
G ⅜	25	9	21	192
G ½	28	11	25	189
G ¾	34	12	27	188
G 1	42	13	29	188
G 1¼	52	13	32	185
G 1½	57	13	35	185

Specification

- Plastic (Polyamide PA)
  - black, matt
  - temperature resistant up to 100 °C
- Sealing ring rubber NBR (Perbunan)
- Dipstick Steel
  - phosphated
  - Level markings / Special lengths GN 109 → *Main Catalogue Page 925*
- *Elastomer characteristics → Page 330*
- *Plastic characteristics → Page 334*
- RoHS compliant

Information

From thread size G½ upwards, the seal of the plugs GN 548.1 is embedded in a radial undercut. For this reason the seal cannot be extruded when tightening the plug.

MAX-MIN lines can easily be marked on the two flat sides of the dipstick (see GN 109 → *Main Catalogue Page 925*).

How to order		
GN 548.1 - G½ - B (1 2)	1	d_1
	2	Type

GN 7403
Aluminium / Stainless Steel

Breather strainers
Stainless Steel mesh

Inox Stainless Steel

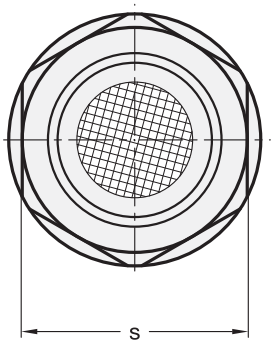

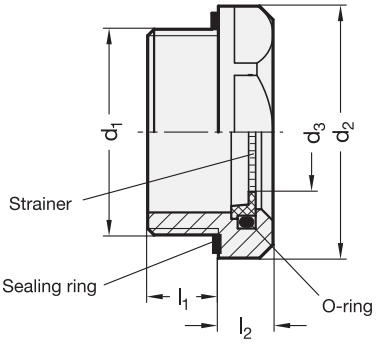

2							3	
d_1		d_2	d_3	l_1	l_2	s	Mesh size in µm	
G ½	M 20 x 1,5	26	10	8,5	7,5	23	100	500
G ¾	M 26 x 1,5	32	14	9	8	30	100	500
G 1	M 33 x 1,5	40	20	11	8,5	36	100	500

Specification

- Body
  - Aluminium **AL**
  - Stainless Steel AISI 303 **NI**
- Strainer
  Stainless Steel mesh
  AISI 304
- Strainer bezel
  Plastic (Polyamide PA)
  - glass fibre reinforced
  - temperature resistant up to 100 °C
- Sealing / O-Ring
  NBR (Perbunan)
- *Elastomer characteristics* → *Page 330*
- *Plastic characteristics* → *Page 331*
- RoHS compliant (only in NI)

Accessory

- Mounting nut GN 543.1
  → *Main Catalogue Page 910*

On request

- Body in brass **MS**
- Other mesh size
- Other material for the strainer

Information

Breather strainers GN 7403 are used in enclosure and device construction. Inserted into the wall of the enclosure, they ensure pressure equilibrium between the inside of the enclosure and the outside.

Any dirt and dust particles carried by the medium (usually gas) are prevented from exiting depending on the mesh size. This protects the insides of sensitive devices and machinery parts from dirt and pollution and also protects the environment from any exiting dust.

The outside diameter of the enclosure with the recessed hexagon matches the bolt mounting holes for DIN 3852 threaded pipe connectors.

The sealing ring is embedded in a radial and plane-sided recess which makes the seal captive and prevents it from being squeezed out during tightening.

Assembly instruction:

For mounting on walls of less than 4 mm thickness, please use mounting nut GN 543.1.

How to order

1 2 3

GN 7403-AL-G1/2-500

1	**Material**
2	**d_1**
3	**Mesh size**

Range extended!

Version **KS-1**

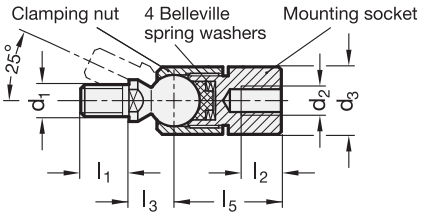

Version **KI-1**

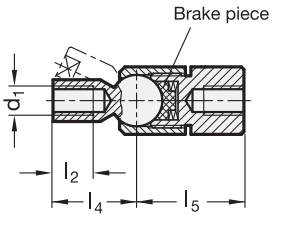

Version **KS-2**

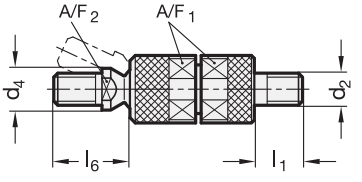

Version **KI-2**

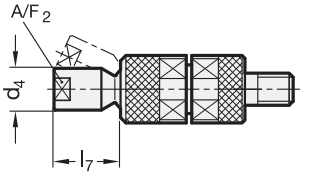

2 Type

KS Ball with male thread
KI Ball with female thread

3 Identification No.

1 Mounting socket with female thread
2 Mounting socket with male thread

1

d_1	d_2	d_3	d_4	l_1	l_2	l_3	l_4	l_5 $^{+1,0}_{-0,3}$	l_6 ≈	l_7 ≈	A/F_1	A/F_2	recommended tightening torque in Nm ≈
M 6	M 6	17	8,5	10	8	11	20	25	16,8	16	15	7	15
M 8	M 8	19	11	12	10	12,5	23	29,5	19,5	18	17	9	20
M 10	M 10	21	13	15	12	14	26	33,5	23,5	20	19	11	35
M 12	M 12	28	16	18	15	20	34	44	27,7	28	25	14	45

Specification

- Steel
  zinc plated, blue passivated
- Brake piece
  Technopolymer (Polyamide PA)
- RoHS compliant

Information

The clamping nut of the ball joints GN 782 can be set to give a required thrust on the Belleville spring washers in order to increase the resistance to the ball movement.

At the same time the Belleville spring washers act as safety washers for the screws.

Once the max. thrust to the Belleville spring washers is reached the ball arm is firmly immobilised in position over the clamping nut and screw.

How to order

GN 782-M10-KS-1

1	d_1
2	Type
3	Identification No.

Type **N**

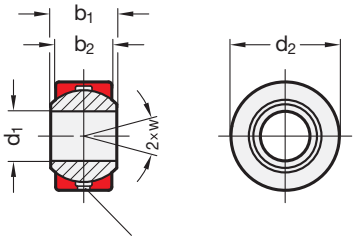

Lubriating hole / groove
(from $d_1 = 6$)

Type **W**

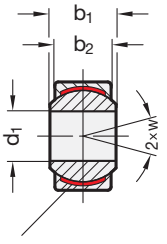

PTFE fabric

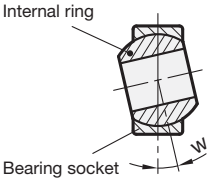

3 Type

N Bronze / Steel, lubrication possible

W Steel-PTFE / Steel, self lubricated

1 d_1 H7	2 d_2 h6	b_1 −0,2	b_2	w Movement angle
5	13	8	6	13°
6	16	9	6,75	13°
8	19	12	9	14°
10	22	14	10,5	13°
12	26	16	12	13°
14	28*	19	13,5	16°
16	32	21	15	15°
18	35	23	16,5	15°
20	40	25	18	14°
22	42	28	20	15°
25	47	31	22	15°
30	55	37	25	17°

* DIN ISO 12240-1: Ø 29

Specification

- Pairings
  - Type N (lubrication possible)
    Bearing socket
    Brass, CuSn8
    Internal ring
    Steel 100 Cr6
    hardened, ground, polished
  - Type W (self lubricated)
    Bearing socket
    Steel, zinc plated
    with PTFE-insert
    Internal ring
    Steel, 100Cr6
    hardened, ground, polished
- *ISO-Fundamental tolerances → Page 323*
- RoHS compliant

Information

Ball joints GN 648.8 are similar to DIN ISO 12240-4, series K.

These ball joints are integrated in the ball joint heads GN 648.1 and GN 648.2.

see also...

- *Ball joint heads with female thread GN 648.1*
  → Main Catalogue Page 948
- *Ball joint heads with threaded bolt GN 648.2*
  → Main Catalogue Page 949

How to order

1 2 3

GN 648.8-16-32-W

1	d_1
2	d_2
3	Type

Type **WK**

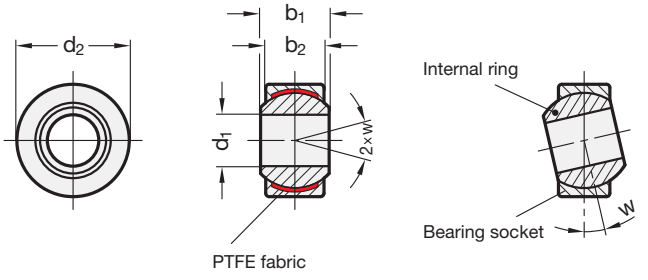

Inox Stainless Steel

3 Type

WK Stainless Steel-PTFE / Stainless Steel self lubricated

1 d_1 H7	2 d_2 h6	b_1 −0,2	b_2	w Movement angle
5	13	8	6	13°
6	16	9	6,75	13°
8	19	12	9	14°
10	22	14	10,5	13°
12	26	16	12	13°
14	28*	19	13,5	16°
16	32	21	15	15°
18	35	23	16,5	15°
20	40	25	18	14°
22	42	28	20	15°
25	47	31	22	15°
30	55	37	25	17°

DIN ISO 12240-1: Ø 29

Specification

- Pairing
  Type WK (self lubricated)
  - Bearing socket
    Stainless Steel AISI 316Ti
    with PTFE-insert
  - Internal ring
    Stainless Steel AISI 420
    hardened, ground, polished
- *ISO-Fundamental Tolerances → Page 323*
- RoHS compliant

Information

Stainless Steel-Ball joints GN 648.9 are similar to DIN ISO 12240-1, series K.

These Stainless Steel-Ball joints are integrated in the Stainless Steel-Ball joint heads GN 648.5 and GN 648.6.

see also...

- *Stainless Steel-Ball joint heads with female thread GN 648.5*
  → Main Catalogue Page 950
- *Stainless Steel-Ball joint heads with threaded bolt GN 648.6*
  → Main Catalogue Page 951

How to order

1 2 3

GN 648.9-19-32-WK

1	d_1
2	d_2
3	Type

GN 132.5 Stainless Steel-Two-way connector clamps

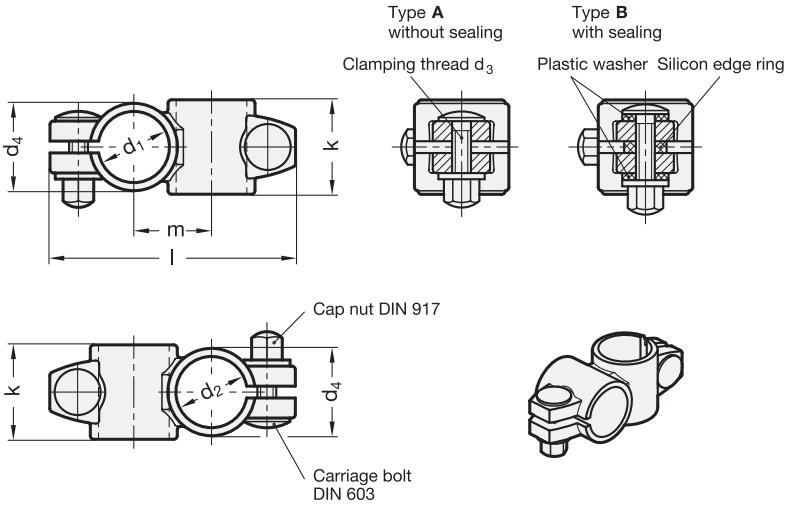

Inox
Stainless
Steel

4 Type

A without sealing
B with sealing

1 d_1 Bore B	2 d_2 Bore B	3 k Clamping length	d_3 Clamping thread	d_4	Length l	m
B 30	B 30	40	M 8	37	104	33

Specification

- Stainless Steel
  - AISI CF-8
  - matt shot-blasted
- Clamping bores mechanically machined
- Carriage bolt DIN 603 Stainless Steel A2
- Cap nuts DIN 917 Stainless Steel A2
- Sealings
  - Washers Plastic (Polyacetal POM)
  - Edge ring Silicon, 40 ... 60 Shore A
- *Stainless Steel characteristics → Page 334*
- RoHS-konform

Information

The clamping bores of the Stainless Steel-Two-way connector clamps GN 132.5 are mechanically machined and designed for construction tubings GN 990 or DIN 2391, DIN 2395 and DIN 2462 respectively.

The shape of the clamping screws / nuts prevents the formation of wetness due to dammed-up water. The designs with sealing (Type B) also seals bore holes and threads.

see also...

- *Stainless Steel-Construction tubes GN 990 → Main Catalogue Page 1027*
- *Stainless Steel - Two-way connector clamps GN 131 (Bore-Ø B12 ... B20) → Main Catalogue Page 976*
- *Stainless Steel-Flanged connector clamps GN 146.5 → Page 288*
- *Stainless Steel-Base plate connector clamps GN 163.5 → Page 289*
- *Stainless Steel-T-angle connector clamps GN 192.5 → Page 290*

How to order

1 2 3 4
GN 132.5-B30-B30-40-A

1	d_1
2	d_2
3	k
4	Type

GN 145

Aluminium / Stainless Steel

Flanged connector clamps

with 2 mounting holes

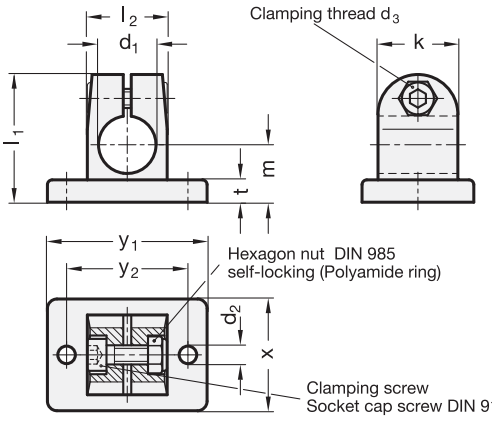

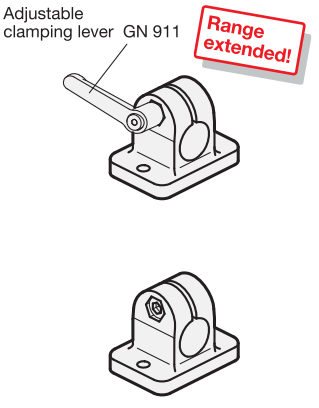

Inox Stainless Steel

Inch sizes available

2 Identification No.

2 with one Stainless Steel-clamping screw DIN 912

1

d_1 Bore B Aluminium	d_1 Bore B Stainless Steel	d_2	d_3 Clamping screw	k Clamping length	l_1	l_2	m	t	x	y_1	y_2	Clamping lever for d_3 (Distance bushing)
B 10	-	5,5	M6	25	40	25	18	7	35	50	38	GN 911-M6-22
B 12	B 12	5,5	M6	25	40	25	18	7	35	50	38	GN 911-M6-22
B 14	B 14	5,5	M6	25	40	25	18	7	35	50	38	GN 911-M6-22
B 15	B 15	5,5	M6	25	40	25	18	7	35	50	38	GN 911-M6-22
B 16	B 16	5,5	M6	25	40	25	18	7	35	50	38	GN 911-M6-22
B 18	B 18	5,5	M6	25	40	25	18	7	35	50	38	GN 911-M6-22
-	B 20	5,5	M6	25	40	25	18	7	35	50	38	GN 911-M6-22

Specification

3

- Aluminium
  - plastic coated
    black, RAL 9005, textured finish ● **SW**
  - blank
    matt shot-blasted ○ **BL**
- Stainless Steel AISI CF-8 **NI**
  matt matt shot-blasted
- Clamping bores mechanically machined
- Socket cap screws DIN 912
  Stainless Steel AISI 304
- Hexagon nuts DIN 985
  Stainless Steel AISI 304
- Adjustable clamping levers GN 911
  - Zinc die casting
  - Inserts / Distance bushings
    Stainless Steel AISI 303 → *Page 292*
- *Stainless Steel characteristics → Page 334*
- RoHS compliant

Information

The clamping bores of the flanged connector clamps GN 145 are mechanically machined and designed for construction tubes GN 990 or DIN 2391, DIN 2395 and DIN 2462 respectively.

The standard clamping screws are socket cap screws DIN 912. They can be used in place of adjustable clamping levers GN 911 (article code see table of dimensions).

Flanged connector clamps GN 145 are also suitable for mounting on profile systems

see also...

- *Foot clamp mountings GN 473 → Main Catalogue Page 1076*
- *Construction tubes GN 990 → Main Catalogue Page 1027*
- *Flanged linear actuator connector GN 145.1*
  → Main Catalogue Page 1048
- *Assembly sets for profile systems 30 / 40 GN 965 → Page 144*
- *Assembly sets for profile systems 30 / 40 / 45 GN 968 → Page 152*

Flanged connector clamp **1 2 3** GN 145-B14-2-SW		
	1	d_1
	2	**Identification No.**
	3	**Finish**

Stainless Steel-Flanged connector clamp **1 2 3** GN 145-B12-2-NI		
	1	d_1
	2	**Identification No.**
	3	**Material**

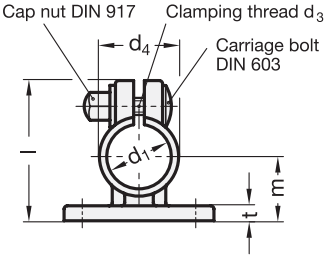

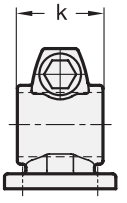

Inox Stainless Steel

4 Type

A without sealing
B with sealing

GN 146.5: with 4 mounting holes

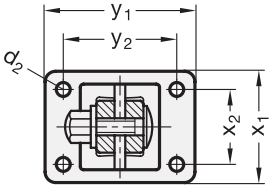

Type **A**
without sealing

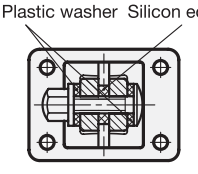

Type **B**
with sealing

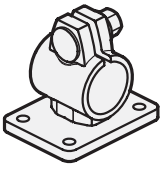

GN 146.6: with 2 mounting holes

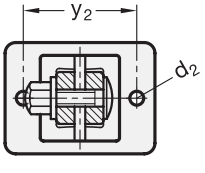

Type **A**
without sealing

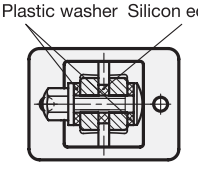

Type **B**
with sealing

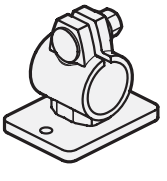

1 d_1 Bore B	2 k Clamping length	d_2	d_3 Clamping thread	d_4	Length l	m	t	x_1	x_2	y_1	y_2
B 30	40	6,5	M 8	37	65	30	7	52	35	71	53

Specification

- Stainless Steel
  - AISI CF-8
  - matt shot-blasted
- Clamping bores mechanically machined
- Carriage bolt DIN 603 Stainless Steel A2
- Cap nuts DIN 917 Stainless Steel A2
- Sealings
  - Washers Plastic (Polyacetal POM)
  - Edge ring Silicon, 40 ... 60 Shore A
- *Stainless Steel characteristics → Page 334*
- RoHS compliant

Information

The clamping bores of the Stainless Steel-Flanged connector clamps GN 146.5 / GN 146.6 are mechanically machined and designed for construction tubings GN 990 or DIN 2391, DIN 2395 and DIN 2462 respectively.

The shape of the clamping screws / nuts prevents the formation of wetness due to dammed-up water. The designs with sealing (Type B) also seals bore holes and threads.

see also...

- *Stainless Steel-Construction tubes GN 990*
  → Main Catalogue Page 1027
- *Stainless Steel-Flanged connector clamps GN 145 → Page 287*

Stainless Steel-Flanged connector clamp		
1 2 3	1	d_1
GN 146.5-B30-40-B	2	k
	3	Type

Stainless Steel-Flanged connector clamp		
1 2 3	1	d_1
GN 146.6-B30-40-A	2	k
	3	Type

GN 163.5 Stainless Steel-Base plate connector clamps

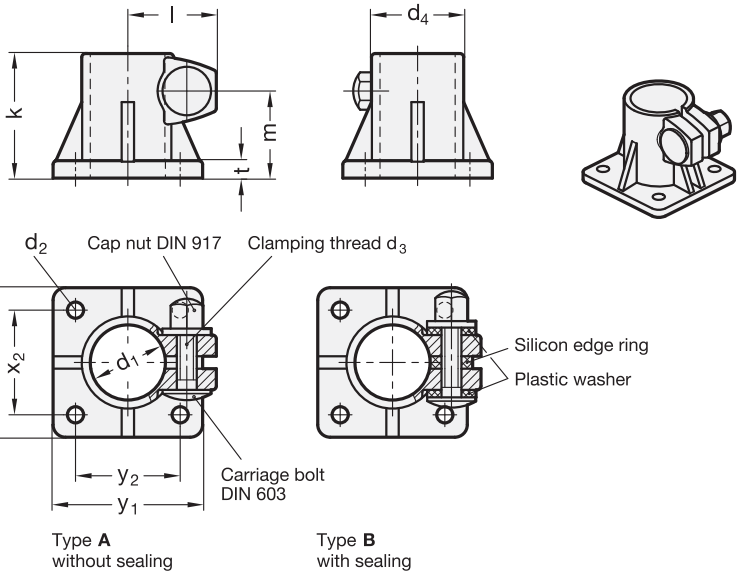

Inox
Stainless
Steel

4 Type

A without sealing
B with sealing

1 d1 Bore B	2 k Clamping length	d2	d3 Clamping thread	d4	Length l	m	t	x1	x2	y1	y2
B 30	50	6,5	M 8	37	36	35	6,5	60	42	60	42

Specification

- Stainless Steel
  - AISI CF-8
  - matt shot-blasted
- Clamping bores mechanically machined
- Carriage bolt DIN 603 Stainless Steel A2
- Cap nuts DIN 917 Stainless Steel A2
- Sealings
  - Washers Plastic (Polyacetal POM)
  - Edge ring Silicon, 40 ... 60 Shore A
- *Stainless Steel characteristics → Page 334*
- RoHS compliant

Information

The clamping bores of the Stainless Steel-Base plate connector clamps GN 163.5 are mechanically machined and designed for construction ubings GN 990 or DIN 2391, DIN 2395 and DIN 2462 respectively.

The shape of the clamping screws / nuts prevents the formation of wetness due to dammed-up water. The designs with sealing (Type B) also seals bore holes and threads.

see also...

- *Stainless Steel-Construction tubes GN 990 → Main Catalogue Page 1027*
- *Stainless Steel-Base plate connector clamps GN 162 (Bore-Ø B12 ... B20 → Main Catalogue Page 988*
- *Stainless Steel-Two-way connector clamps GN 132.5 → Page 286*
- *Stainless Steel-T-angle connector clamps GN 192.5 → Page 290*

How to order		
GN 163.5-B30-50-B (1 2 3)	1	d1
	2	k
	3	Type

GN 192.5 Stainless Steel-T-angle connector clamps

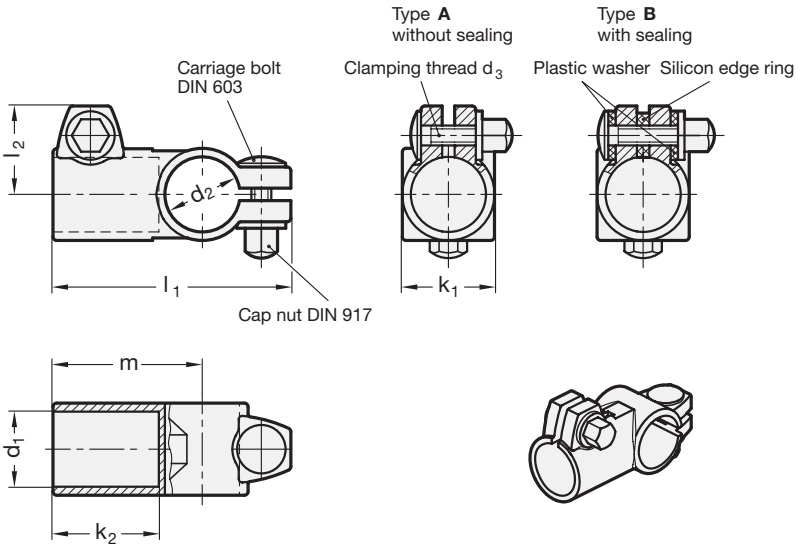

Inox
Stainless
Steel

4 Type

A without sealing
B with sealing

1 d_1 Bore B	2 d_2 Bore B	3 k_1 Clamping length	d_3 Clamping thread	k_2	l_1	l_2	m
B 30	B 30	37	M 8	42	96	35	60

Specification

- Stainless Steel
  - AISI CF-8
  - matt shot-blasted
- Clamping bores mechanically machined
- Carriage bolt DIN 603 Stainless Steel A2
- Cap nuts DIN 917 Stainless Steel A2
- Sealings
  - Washers Plastic (Polyacetal POM)
  - Edge ring Silicon, 40 ... 60 Shore A
- *Stainless Steel characteristics → Page 334*
- RoHS compliant

Information

The clamping bores of the Stainless Steel-T-angle connector clamps GN 192.5 are mechanically machined and designed for construction tubings GN 990 or DIN 2391, DIN 2395 and DIN 2462 respectively.

The shape of the clamping screws / nuts prevents the formation of wetness due to dammed-up water. The designs with sealing (Type B) also seals bore holes and threads.

see also...

- *Stainless Steel-Construction tubes GN 990*
  → Main Catalogue Page 1027
- *T-angle connector clamps GN 192 (Bore-Ø B12 ... B20)*
  → Main Catalogue Page 996
- *Stainless Steel-Two-way connector clamps GN 132.5 → Page 286*
- *Stainless Steel-Flanged connector clamps GN 146.5 → Page 288*
- *Stainless Steel-Base plate connector clamps GN 163.5 → Page 289*

How to order

1 2 3 4
GN 192.5-B30-B30-37-A

1	d_1
2	d_2
3	k_1
4	Type

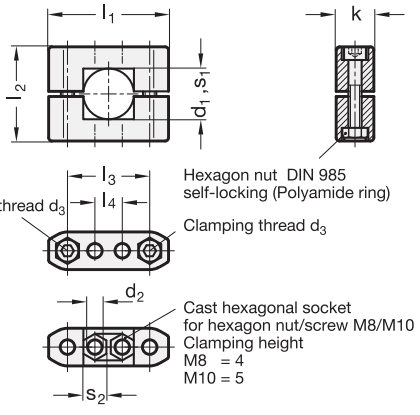

Range extended!

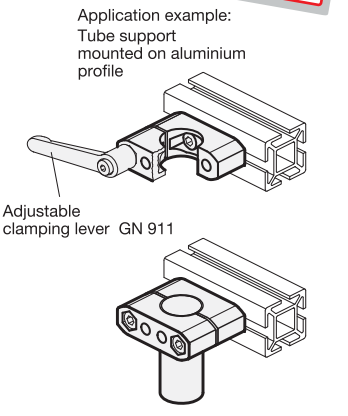

2 **Identification No.**

2 with 2 Stainless Steel-clamping screws DIN 912

1

d_1 Bore B							d_2	d_3 Clamping thread	k Clamping length	l_1	l_2	l_3	l_4	s_2	Clamping lever for d_3
B 8	B 10	B 12	B 14	B 15	B 16	B 18	6,2	M 6	17	52	38	36	10,5	10	GN 911-M 6-32
B 20	B 25	B 30	-	-	-	-	8,5	M 8	22	70	55	48	16	13	GN 911-M 8-50
B 40	B 42	B 45	B 48	B 50	-	-	11	M 10	27	100	80	73	30	17	GN 911-M10-70
B 55	B 60	-	-	-	-	-	11	M 10	27	100	90	78	30	17	GN 911-M10-80

1

s_1 Square V							d_2	d_3 Clamping thread	k Clamping length	l_1	l_2	l_3	l_4	s_2	Clamping lever for d_3
V 8	V 10	V 12	V 14	V 15	V 16	V 18	6,2	M 6	17	52	38	36	10,5	10	GN 911-M 6-32
V 20	V 25	V 30	-	-	-	-	8,5	M 8	22	70	55	48	16	13	GN 911-M 8-50
V 40	V 45	V 50	-	-	-	-	11	M 10	27	100	80	73	30	17	GN 911-M10-70
V 55	V 60	-	-	-	-	-	11	M 10	27	100	90	78	30	17	GN 911-M10-80

Specification

3

- Aluminium
  - plastic coated
    black, RAL 9005, textured finish ● SW
  - blank
    matt shot-blasted ○ BL
- Clamping bores not machined
- Socket cap screws DIN 912
  Stainless Steel AISI 304
- Hexagon nuts DIN 985
  Stainless Steel AISI 304
- Adjustable clamping levers GN 911
  - Zinc die casting
  - Inserts / Distance bushings
    Stainless Steel AISI 303 → *Page 292*
- *Stainless Steel characteristics → Page 334*
- RoHS compliant

Information

The clamping bores of the tube supports GN 231 are not machined and specially designed for construction tubes GN 990 or DIN 2391, DIN 2395 and DIN 2462 respectively.

The standard clamping screws are socket cap screws DIN 912. They can be replaced by adjustable clamping levers GN 911 (article code see table of dimensions).

see also...

- *Construction tubes GN 990 → Main Catalogue Page 1027*
- *Assembly sets for profile systems 30 / 40 GN 965 → Page 145*
- *Assembly sets for profile systems 30 / 40 / 45 GN 968 → Page 153*

How to order

GN 231-B40-2-BL (1 2 3)

1	d_1 (s_1)
2	Identification No.
3	Finish

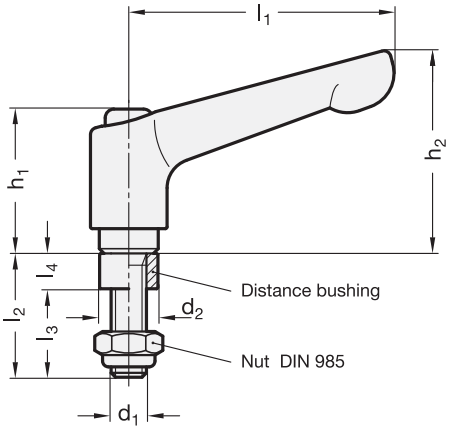

Range extended!

1 d_1	2 l_2	d_2	l_1	l_3	l_4	h_1	h_2
M 6	22	9,9	45	19	3	24,5	35
M 6	25	9,9	45	22	3	24,5	35
M 6	32	9,9	45	29	3	24,5	35
M 8	32	12,9	63	27,5	4,5	31	45
M 8	35	12,9	63	30,5	4,5	31	45
M 8	40	12,9	63	35,5	4,5	31	45
M 8	45	12,9	63	40,5	4,5	31	45
M 8	50	12,9	63	45,5	4,5	31	45
M 8	55	12,9	63	50,5	4,5	31	45
M 10	40	16,9	78	34,5	5,5	36	55
M 10	50	16,9	78	44,5	5,5	36	55
M 10	55	16,9	78	49,5	5,5	36	55
M 10	63	16,9	78	57,5	5,5	36	55
M 10	70	16,9	78	64,5	5,5	36	55
M 10	80	16,9	78	74,5	5,5	36	55

Specification

- Handle
  Zinc die casting
  plastic coated
  silver, RAL 9006, textured finish
- Threaded stud / Distance bushing
  Stainless Steel AISI 303
- Hexagon nut DIN 985
  Stainless Steel AISI 304
- *Stainless Steel characteristics → Page 334*
- RoHS compliant

Information

The clamping kits GN 911 replace the hexagon socket screws DIN 912 of the connector clamps.

The table of dimensions of the connector clamps shows the corresponding clamping kits for each clamping thread.

Distance bushing and hexagon nut are included parts of the order.

How to order		
GN 911-M8-45	1	d_1
	2	l_2

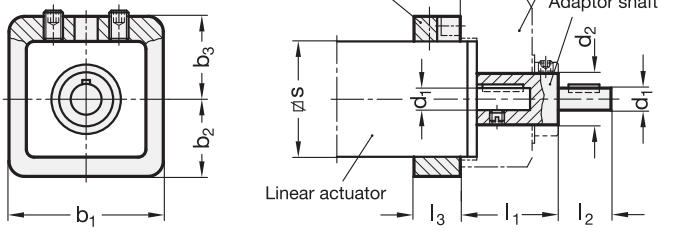

1 s ⌀ Linear actuator	2 d_1 f7	d_2	b_1	b_2	b_3	l_1	l_2	l_3	for position indicator
30	8	14	40	20	23,5	35	15	12	GN 954
40	12	20	50	25	25	39	16	12	GN 953
50	12	20	60	30	31,5	39	17	12	GN 953

Specification

- Adaptor shaft
  Steel
  blackened
- Torque support
  Aluminum
  blank, ground
- RoHS compliant

Accessory

- Position indicators and handwheels have to be ordered separately.

Information

With the installation kit GN 296 the square linear actuator can be fitted with a digital position indicator.

An installation kit comprises an adaptor shaft and a torque support.

A retrofit is possible. The handwheel is removed, the kit is mounted and the handwheel is refitted.

As a rule a counter is chosen which is matched to the pitch of the spindle with trapezoidal thread so the indicator after one complete revolution accords to the pitch of the spindle.

see also...
- *Position indicators GN 953 → Main catalogue Page 388*
- *Position indicators GN 954 → Main catalogue Page 390*
- *Square linear actuators GN 291.1 → Main catalogue Page 1056*

How to order		
GN 296-30-8 (1 2)	1	s ⌀
	2	d_1

GN 297 Bevel gear wheels

with spiral bevel for linear actuators / transfer units with angular gear

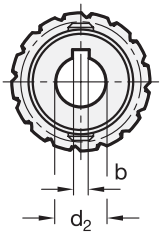

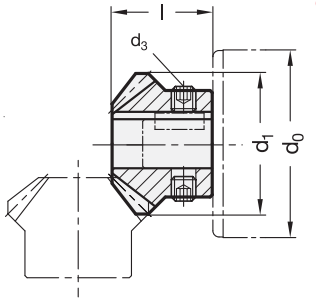

Range extended!

Type **R**

Type **L**

3 Type

R Bevel gear wheel, right-hand pitch

L Bevel gear wheel, left-hand pitch

W Set of bevel gears 2 bevel gears, 1 x right-hand pitch, 1 x left-hand pitch

T Set of bevel gears 3 bevel gears, 1 x right-hand pitch, 2 x left-hand pitch

d_0 Ø Linear actuator / Transfer unit	**1** **d_1**	**2** **d_2** H7 Bore with keyway K	**b**	**d_3**	Length **l**
18	14,5	K 6	2	M 4	11
30	25	K 8	2	M 6	19
40 / 50	33	K 12	4	M 6	23,5

Specification

- Steel hardened
- Teeth milled
- RoHS compliant

Information

Bevel gear wheels GN 297 are used for angular / T-gears in connection with linear actuators / transfer units and housings GN 298.

The spiral bevel facilitates both setting the desired clearance and locating the correct position of the bevel gears. Also, gears set up this way run with extremely low noise levels.

Two bevel gears are needed for an angular gear, three bevel gears are needed for a T-gear. These are available as set in Type W and Type T resp.

Please note that only bevel gears with different pitches can be paired. The transmission ratio is always 1:1, because the bevel gears always have the same number of teeth.

see also...

- *Linear actuators GN 291 → Main Catalogue Page 1036*
- *Linear actuators GN 292 → Main Catalogue Page 1038*
- *Linear actuators GN 293 → Main Catalogue Page 1039*
- *Housings GN 298 (for angular / T-gears) → Main Catalogue Page 1070*
- *Assembly and application examples → Main Catalogue Page 1072*

How to order

GN 297-33-K12-T

1	d_1
2	d_2
3	Type

GN 475 Twistable two-way clamp mountings

Aluminium

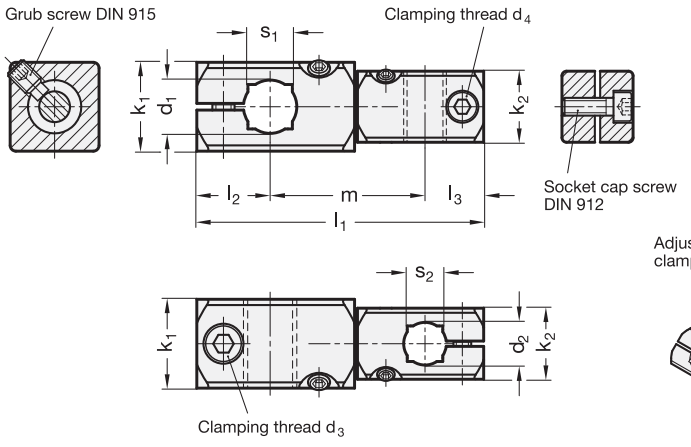

Range extended!

1 d_1 Bore B for shaft tol. h11	2 d_2 Bore B for shaft tol. h11	k_1	k_2	d_3 Claming thread	d_4 Claming thread	l_1	l_2	l_3	m	s_1 Square V	s_2 Square V	Clamping lever for d_3	Distance sleeve for d_4
B 8	B 8	16	16	M 4	M 4	52,5	13	13	26,5	-	-	GN 511-M4-16	GN 511-M4-16
B 10	B 8	20	16	M 5	M 4	58	15,5	13	29,5	8	-	GN 511-M5-20	GN 511-M4-16
B 10	B 10	20	20	M 5	M 5	63,5	15,5	15,5	32,5	8	8	GN 511-M5-20	GN 511-M5-20
B 12	B 8	20	16	M 5	M 4	62	16,5	13	32,5	10	-	GN 511-M5-20	GN 511-M4-16
B 12	B 12	20	20	M 5	M 5	71,5	16,5	16,5	38,5	10	10	GN 511-M5-20	GN 511-M5-20
B 15	B 10	25	20	M 6	M 5	75,5	20	15,5	40	12	8	GN 511-M6-25	GN 511-M4-16
B 15	B 12	25	20	M 6	M 5	79,5	20	16,5	43	12	10	GN 511-M6-25	GN 511-M5-20
B 15	B 15	25	25	M 6	M 6	87,5	20	20	47,5	12	12	GN 511-M6-25	GN 511-M6-25
B 16	B 12	25	20	M 6	M 5	81	20	16,5	44,5	-	10	GN 511-M6-25	GN 511-M5-20
B 16	B 16	25	25	M 6	M 6	90,5	20	20	50,5	-	-	GN 511-M6-25	GN 511-M6-25
B 20	B 15	30	25	M 6	M 6	95	22	20	53	16	12	GN 511-M6-30	GN 511-M6-25
B 20	B 16	30	25	M 6	M 6	96,5	22	20	54,5	16	-	GN 511-M6-30	GN 511-M6-25
B 20	B 20	30	30	M 6	M 6	102,5	22	22	58,5	16	16	GN 511-M6-30	GN 511-M6-30

Specification

3

- Aluminium
  - matt, slide ground **MT**
  - anodized, black **ELS**
- Socket cap screws DIN 912
  Stainless Steel AISI 304
- Grub screw DIN 915
  Stainless Steel AISI 304
- Adjustable clamping levers GN 511
  - Zinc die casting
  - Inserts / Distance bushings
    Stainless Steel AISI 303 → *Page 301*
- *Stainless Steel characteristics → Page 334*
- RoHS-compliant

Information

Twistable two-way clamp mountings GN 475 connect rods and tubes within the clamp mounting system under any adjustable angle. With the angle adjustment released, the clamp mounting halves stay connected with formlocking effect.

The standard version of the clamping screws at the clamping threads d_3 and d_4 are socket cap screws with hexagonal socket DIN 912. They can be replaced by an adjustable clamping lever GN 511 (description see table of dimensions).

see also...

- *Retaining rods / tubes GN 480.1 → Main Catalogue Page 1085*

How to order		
GN 475-B10-B10-MT (1 2 3)	1	d_1
	2	d_2
	3	Finish

GN 476 T-Clamp mountings

Aluminium

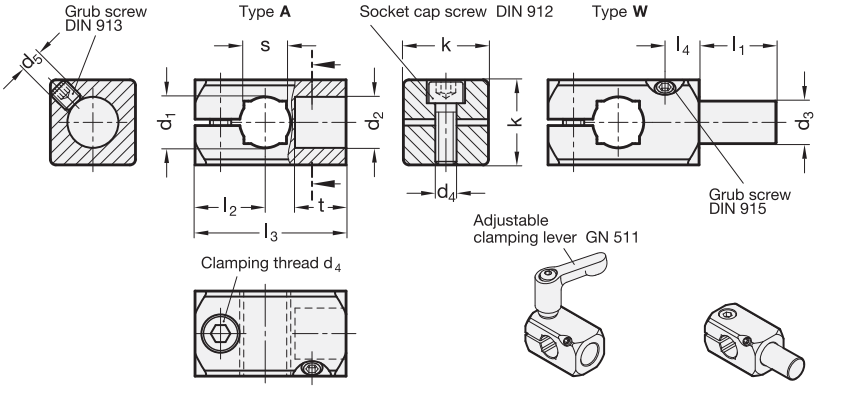

3 Type

A with bore
W with bolt

1 d_1 Bore B for shaft tol. h11	2 d_2 Type A	2 d_3 Type W	k	d_4 Clamping thread	d_5	l_1	l_2	l_3	l_4	t	s Square V	Clamping lever for d_4 (Distance sleeve)
B 8	B 8	8	16	M 4	M 4	16	13	26	5,5	8	-	GN 511-M4-16
B 10	B 10	10	20	M 5	M 5	17	15,5	31,5	7	10	8	GN 511-M5-20
B 12	B 12	12	20	M 5	M 5	19	16,5	35,5	8	12	10	GN 511-M5-20
B 15	B 15	15	25	M 6	M 6	21	20	43,5	10	15	12	GN 511-M6-25
B 16	B 16	16	25	M 6	M 6	24	20	45	11	16	-	GN 511-M6-25
B 20	B 20	20	30	M 6	M 6	26	22	51	12	18	16	GN 511-M6-30

Specification

4

- Aluminium
  - matt, slide ground **MT**
  - anodized, black **ELS**
- Bolt (Type W)
  Stainless Steel AISI 303
- Socket cap screw DIN 912
  Stainless Steel AISI 304
- Grub screw DIN 913 (Type A)
  Stainless Steel AISI 304
- Grub screw DIN 915 (Type W)
  Stainless Steel AISI 304
- Adjustable clamping levers GN 511
  - Zinc die casting
  - Inserts / Distance bushings
    Stainless Steel AISI 303 → *Page 301*
- *Stainless Steel characteristics → Page 334*
- RoHS-compliant

Information

The T-Clamp mountings GN 476 (Type W) are an alternative to twistable two-way clamp mountings GN 475 if high angular forces are required.

The standard version of the clamping screw is a socket cap screw with hexagonal socket DIN 912. It can be replaced by an adjustable clamping lever GN 511 (see table of dimensions).

see also...

- *Retaining rods / tubes GN 480.1 → Main Catalogue Page 1085*

T-Clamp mounting		
1 2 3 4 GN 476-B12-B12-A-MT	1	d_1
	2	d_2
	3	Type
	4	Finish

T-Clamp mounting with bolt		
1 2 3 4 GN 476-B12-12-W-ELS	1	d_1
	2	d_3
	3	Type
	4	Finish

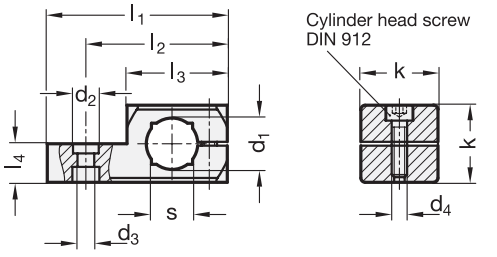

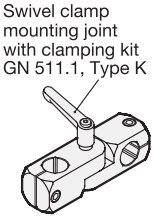

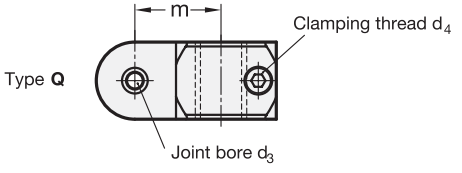

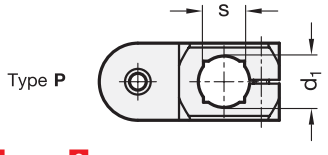

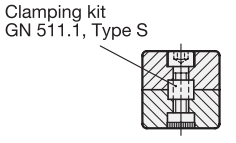

3 Type

Q Clamping bore transverse to the swivel axis

P Clamping bore parallel to the swivel axis

1 d_1 Bore B for shaft tol. h11	2 k	d_2	d_3 Joint bore	d_4 Clamping thread	l_1	l_2	l_3	m	l_4	s Square V	Clamping kit for d_3 Type S / K (Swivel joint)	Clamping kit for d_4 (Clamping bore)
B 8	16	7	4,5	M 4	40	32	23	18,5	8	-	GN 511.1-M4-16-S/K	GN 511-M4-16
B 10	20	8,5	5,5	M 5	50	40	29	23	10	8	GN 511.1-M5-20-S/K	GN 511-M5-20
B 12	20	8,5	5,5	M 5	50	40	29	23	10	10	GN 511.1-M5-20-S/K	GN 511-M5-20
B 15	25	10	6,5	M 6	62	49,5	36	29	12,5	12	GN 511.1-M6-25-S/K	GN 511-M6-25
B 16	25	10	6,5	M 6	62	49,5	36	29	12,5	-	GN 511.1-M6-25-S/K	GN 511-M5-25
B 20	30	10	6,5	M 6	70	55	39	33,5	15	16	GN 511.1-M6-30-S/K	GN 511-M6-30

Specification

4

- Aluminium
  - matt, slide ground **MT**
  - anodized black **ELS**
- Cylinder head screws DIN 912
  Stainless Steel AISI 304
- *Stainless Steel characteristics → Page 334*
- RoHS compliant

Information

Swivel clamp mountings GN 482 can be combined with T-Swivel clamp mountings GN 483 and attachment clamp mountings GN 484 with the same k dimensions into swivel clamp mounting joints. Clamping kits GN 511.1 with screw (type S) and adjustable hand lever (type K) are available for this combination.

Also, the clamping screw d_4 - which is a cylinder head screw with DIN 912 hexagonal recess in the standard design - can be replaced by a clamping kit GN 511.

The description for ordering is shown in the dimensional table.

see also...

- *Clamping kits GN 511.1 → Page 302*
- *Retaining rods / Retaining tubes GN 480.1*
  → Main Catalogue Page 1085

How to order		
1 2 3 4 **GN 482-B12-20-Q-ELS**	1	d_1
	2	k
	3	Type
	4	Finish

GN 483 T-Swivel clamp mountings

Aluminium

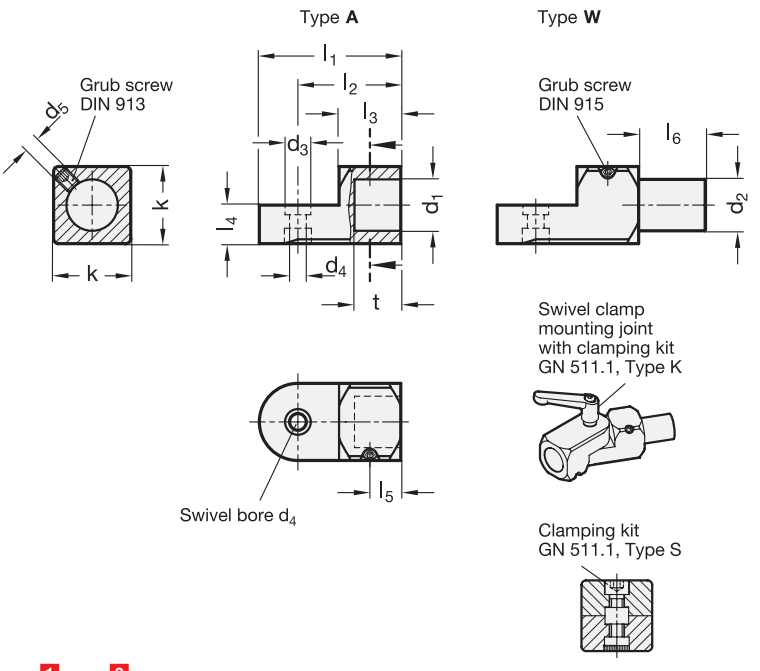

Inox Stainless Steel

3 Type

A with bore
W with bolt

1 d_1 Type A	1 d_2 Type W	2 k	d_3	d_4 Joint bore	d_5	l_1	l_2	l_3	l_4	l_5	l_6	t	Clamping kit for d_4 Type S	Clamping kit for d_4 Type K
B 8	8	16	7	4,5	M 4	30	22	13	8	5,5	16	8	GN 511.1-M4-16-S	GN 511.1-M4-16-K
B 10	10	20	8,5	5,5	M 5	38	28	17	10	7	17	10	GN 511.1-M5-20-S	GN 511.1-M5-20-K
B 12	12	20	8,5	5,5	M 5	38	28	17	10	8	19	12	GN 511.1-M5-20-S	GN 511.1-M5-20-K
B 15	15	25	10	6,5	M 6	46	33,5	20	12,5	10	21	15	GN 511.1-M6-25-S	GN 511.1-M6-25-K
B 16	16	25	10	6,5	M 6	46	33,5	20	12,5	11	24	16	GN 511.1-M6-25-S	GN 511.1-M6-25-K
B 20	20	30	10	6,5	M 6	55	40	24	15	12	26	18	GN 511.1-M6-30-S	GN 511.1-M6-30-K

Specification

4

- Aluminium
  - matt, slide ground **MT**
  - anodized black **ELS**
- Bolt (Type W)
  Steel zinc-plated, blue passivated
- Grub screw DIN 913 (Type A)
  Stainless Steel AISI 304
- Grub screw DIN 915 (Type W)
  Stainless Steel AISI 304
- *Stainless Steel characteristics*
  → Main catalogue page 334
- RoHS compliant

Information

T-Swivel clamp mountings GN 483 can be combined with swivel clamp mountings GN 482 and attachment clamp mountings GN 484 with the same k dimensions into articulated swivel clamp mounting joints. Clamping kits GN 511.1 with screw, type S and adjustable hand lever, type K are available for this purpose (description see table of dimensions).

see also...

- *Swivel clamp mountings GN 482 → Page 297*
- *Retaining rods / Retaining tubes GN 480.1 → Main catalogue Page 1085*

T-Swivel clamp mountings with bore		
1 2 3 4 GN 483-B12-20-A-MT	1	d_1
	2	k
	3	Type
	4	Finish

T-Swivel clamp mountings with bolt		
1 2 3 4 GN 483-20-30-W-ELS	1	d_1
	2	k
	3	Type
	4	Finish

GN 484 Attachment clamp mountings

Aluminium

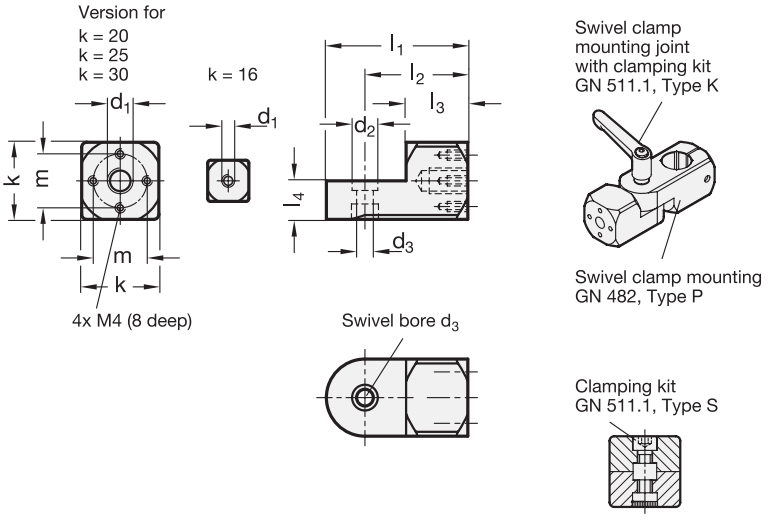

1 d_1			2 k	d_2	d_3 Joint bore	l_1	l_2	l_3	l_4 Square V	m	Clamping kit for d_3 Type S	Clamping kit for d_3 Type K
M 5	M 6	M 8	16	7	4,5	30	22	13	8	-	GN 511.1-M4-16-S	GN 511.1-M4-16-K
M 6	M 8	-	20	8,5	5,5	38	28	17	10	14	GN 511.1-M5-20-S	GN 511.1-M5-20-K
M 8	M 10	-	25	10	6,5	46	33,5	20	12,5	17	GN 511.1-M6-25-S	GN 511.1-M6-25-K
M 8	M 10	M 12	30	10	6,5	55	40	24	15	20	GN 511.1-M6-30-S	GN 511.1-M6-30-K

Specification

3

- Aluminium
  - matt, slide ground **MT**
  - anodized black **ELS**
- RoHS compliant

Information

Attachment clamp mountings GN 484 are primarily designed for mounting sensor holders GN 479 and retaining plates GN 479.1. They are fitted with a central thread and for the size with k = 20 and higher, an additional bore template 4 x M4.

Using swivel clamp mountings GN 482 and T-Swivel clamp mountings GN 483 with the same k dimensions, attachment clamp mountings GN 484 are easily combined into articulated swivel clamp mounting joints. Clamping kits GN 511.1 with screw, type S and adjustable hand lever, type K are available for this purpose (description see table of dimensions).

see also...

- *Swivel clamp mountings GN 482 → Page 297*
- *Retaining rods / Retaining tubes GN 480.1 → Main catalogue page 1085*
- *Sensor holders GN 479 → Main catalogue page 1082*
- *Retaining plates GN 479.1 → Main catalogue page 1083*

How to order		
1 2 3	1	d_1
GN 484-M8-20-ELS	2	k
	3	Finish

GN 490 Twistable two-way clamp mountings

Aluminium

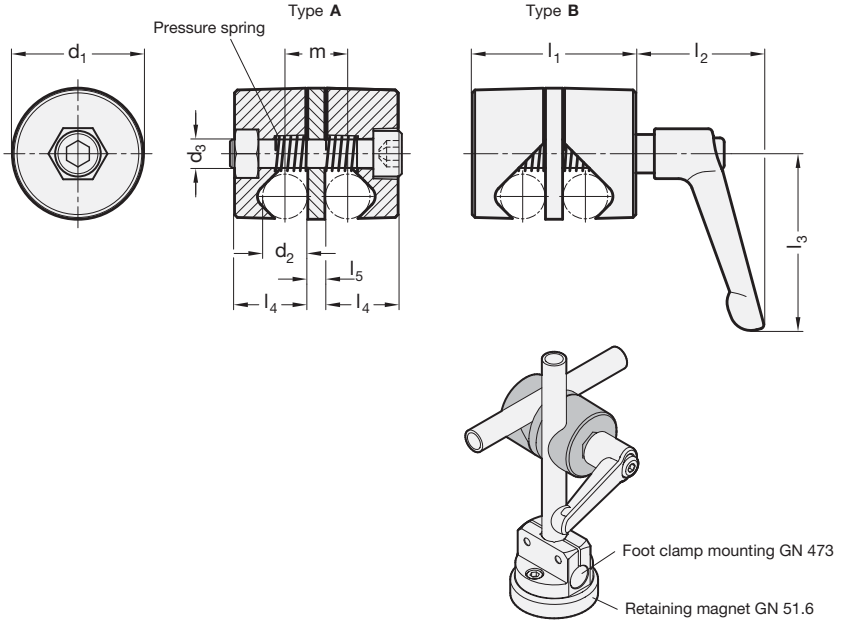

3 Type

A with cylinder head screw DIN 912

B with adjustable clamping lever GN 300.1

1 d_1	2 d_2 Clamping-Ø	d_3	l_1	l_2	l_3	l_4	l_5	m
28	8	M 6	33	35	45	14	5	13
32	10	M 8	45	45	63	20	5	15
36	12	M 8	47	45	63	21	5	17
46	16	M 10	57	55	78	27	6	22

Specification

4

- Aluminium
  - plain, matte tumbled finish — MT
  - plastic coated black, RAL 9005, textured finish — SW
- Socket cap screws DIN 912 Stainless Steel AISI 304
- Hexagon nuts DIN 934 Stainless Steel AISI 304
- Adjustable clamping lever GN 300.1
  - Zinc die casting plastic coated silver, RAL 9006, textured finish
  - Insert / Distance bushing Stainless Steel AISI 303
- *Stainless Steel characteristics → Page 334*
- RoHS compliant

Information

Twistable two-way clamp mountings GN 490 clamp the rods or tubes via a prism, allowing a greater Ø tolerance to be bridged. The pressure spring makes clamping and releasing easier.

see also...

- *Two-way clamp mountings GN 474 → Main Catalogue Page 1078*
- *Twistable two-way clamp mountings GN 475 → Page 295*
- *Foot clamp mountings GN 473 → Main Catalogue Page 1076*

How to order

1 2 3 4

GN 490-32-10-A-SW

1	d_1
2	d_2
3	Type
4	Finish

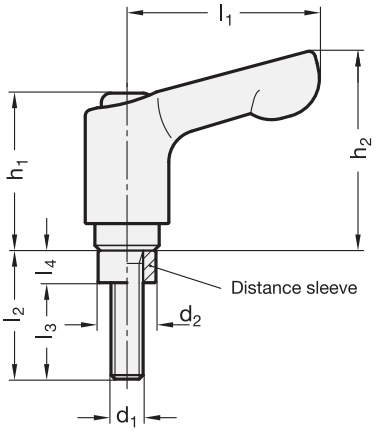

Range extended!

1 d_1	2 l_2	d_2	l_1	l_3	l_4	h_1	h_2
M 4	14	7,5	30	9,5	4,5	24,5	30,5
M 4	16	7,5	30	11,5	4,5	24,5	30,5
M 4	20	7,5	30	15,5	4,5	24,5	30,5
M 5	16	9	30	10	6	24,5	30,5
M 5	20	9	30	14	6	24,5	30,5
M 5	25	9	30	19	6	24,5	30,5
M 6	20	10,5	45	13,5	6,5	24,5	35
M 6	25	10,5	45	18,5	6,5	24,5	35
M 6	30	10,5	45	23,5	6,5	24,5	35
M 6	32	10,5	45	25,5	6,5	24,5	35

Specification

- Handle
  Zinc die casting
  plastic coated
  silver, RAL 9006, textured finish
- Insert / Distance bushing
  Stainless Steel AISI 303
- *Stainless Steel characteristics → Page 334*
- RoHS-compliant

Information

For clamp mountings, the clamping kits GN 511 replace the hexagon socket screw DIN 912. It is used on all clamping points where repeated clamping actions are required, e.g. for adjusting a stop mechanism.

The matching clamping kits for each clamping thread are listed in the dimensional tables of the clamp mountings.

How to order		
GN 511-M5-25	1	d_1
	2	l_2

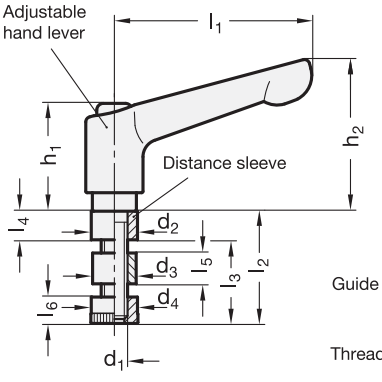

Type **K**

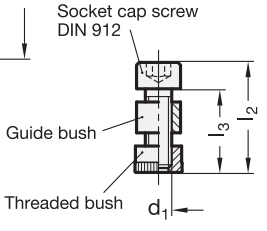

Type **S**

Mounting example

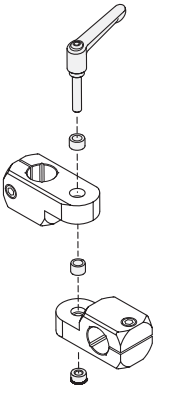

3 Type

S with cylinder head screw DIN 912

K with adjustable hand levers

1 d_1	2 l_2	d_2	d_3	d_4	l_1	l_3	l_4	l_5	l_6	h_1	h_2	Swivel clamp mounting k-dimension
M 4	16	7,5	6,9	7,5	30	11,5	4,5	4	4	24,5	30,5	16
M 5	20	9	8,4	9	30	14	6	5	5	24,5	30,5	20
M 6	25	10,5	9,9	10,5	45	18,5	6,5	7	6	24,5	35	25
M 6	30	10,5	9,9	10,5	45	23,5	6,5	7	6	24,5	35	30

Specification

- Handle
  Zinc die casting
  plastic coated
  silver, RAL 9006, textured finish
- Threaded insert, distance sleeve, centering bushing, threaded bushing
  Stainless Steel AISI 303
- Cylinder head screw DIN 912
  Stainless Steel AISI 304
- *Stainless Steel characteristics* → *Page 334*
- RoHS compliant

Information

With clamping kits GN 511.1 swivel clamp mountings GN 482 can be combined with T-Swivel clamp mountings GN 483 and attachment clamp mountings GN 484 with the same k-dimensions into swivel clamp mounting joints.

The centering bushing positions the swivel clamp mountings in relation to each other. During assembly, the knurled threaded bushing is inserted by the clamping screw itself and by pressing into one of the two swivel clamp mountings and so serves to clamp the articulated joint.

The matching clamping kits are shown in the dimensional tables of the appropriate swivel clamp mountings.

see also...

- *Swivel clamp mountings GN 482* → *Page 297*

How to order

1 2 3

GN 511.1-M5-20-S

1	d_1
2	l_2
3	**Type**

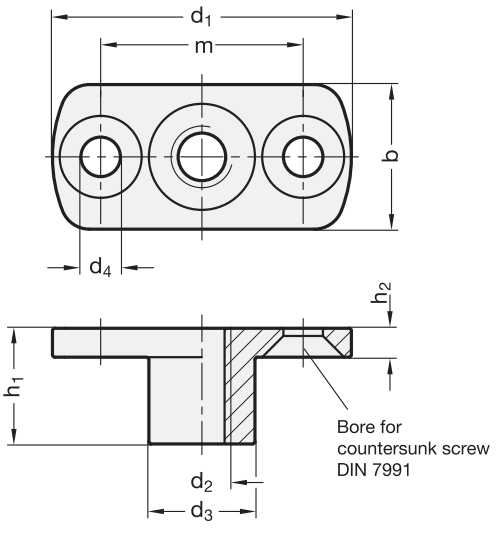

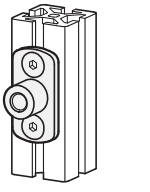

1 d_1	2 d_2		3 h_1	b	d_3	d_4 for screw	h_2	m
45	M 6	M 8	16	25	15	M 6	6	30
60	M 10	M 12	24	30	21,5	M 8	6	40

Specification

4

- Steel fine casting
  - zinc plated, blue passivated **ZB**
  - zinc plated and plastic coated black, RAL 9005, textured finish ● **SW**
- RoHS compliant

Information

Threaded flanges GN 3490 are used in connection with T-slot profile systems and allow elements to be assembled on or underneath the profiles, e.g. levelling feet.

Depending on the threaded flange, thread size and thread depth dimensions that are available can exceed the dimensions of the profile groove.

see also...
- *Assembly sets for profile systems 30 / 40 GN 965 → Page 149*
- *Assembly sets for profile systems 30 / 40 / 45 GN 968 → Page 157*

How to order

1 2 3 4
GN 3490-45-M8-16-SW

1	d_1
2	d_2
3	h_1
4	Finish

GN 649 | Panel support clamp

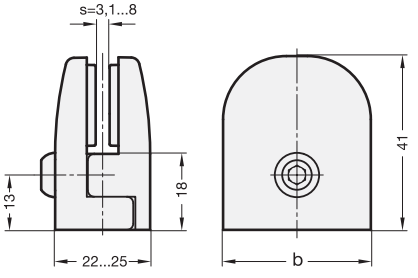

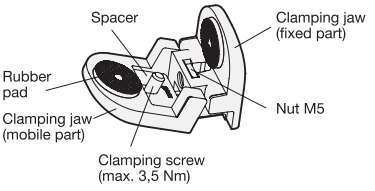

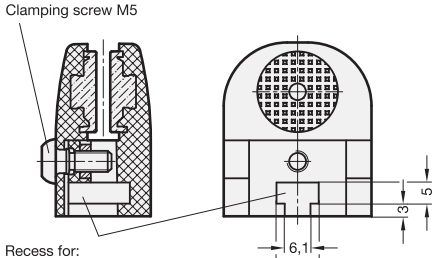

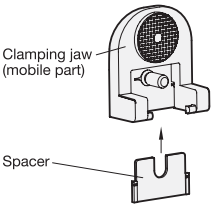

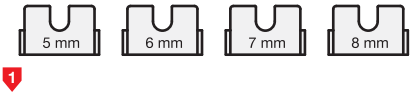

ELESA original design PC

2 Type

E Mounting on plane surface

1

b	s Clamping range	Spacers
35	3,1 = s < 4,1	-
	4,1 = s < 5,1	5 mm
	5,1 = s < 6,1	6 mm
	6,1 = s < 7,1	7 mm
	7,1 = s < 8,0	8 mm

Specification

- Clamping jaw
  Plastic
  Technoplymer (Polyamide PA)
  - glass fibre reinforced
  - grey, matt, RAL 7042
  - temperature resistant up to 70 °C
- Rubber pad
  Elastomer (TPE)
  - 70 Shore A
  - temperature resistant up to 70 °C
  - black
- Spacer
  Technoplymer (Polyamide PA)
  - grey, matt, RAL 7042
  - temperature resistant up to 70 °C
- Clamping screw M5
  Steel
  zinc plated, blue passivated
- RoHS compliant

Information

The panel support clamp GN 649 comply with Mechanical Engineering Directive 2006 / 42 / EG (captivity of the fixing element when open).

The two clamping jaws remain connected also when open by means of a pin sliding into a groove. The clamping screw (M5) is also captive.

The rubber pad is sheathed, i.e. firmly connected to the clamping jaw. Its structured surface prevents it from sticking to the plate element.

Using spacers, panels with thicknesses ranging from 3 to 8 mm can be clamped. The 4 spacers are included parts of the delivery.

see also...
- *Product family Ergostyle® → Main Catalogue Page 12*
- *Assembly sets for profile systems 30 / 40 GN 965 → Page 149*
- *Assembly sets for profile systems 30 / 40 / 45 GN 968 → Page 157*

How to order 1 2 GN 649-35-E		
	1	b
	2	Type

GN 649.1 Adapter

for GN 649 to be mounted to round tubes

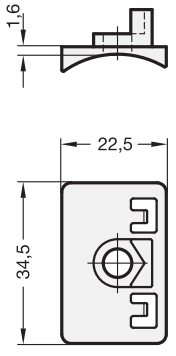

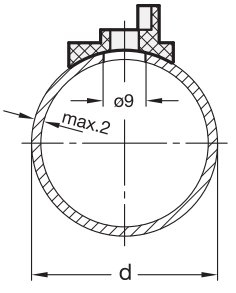

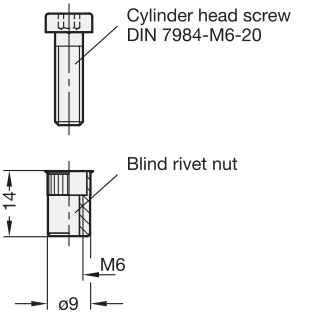

ELESA original design APC.

Installation instruction

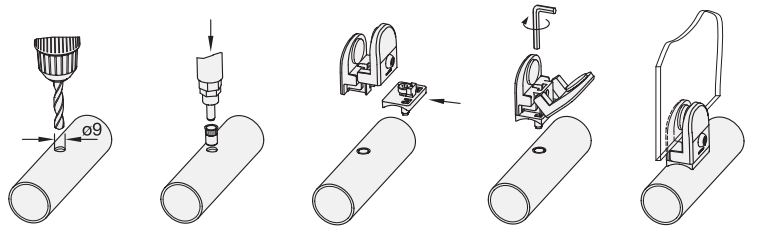

Drill hole

Mount the blind rivet nut

Push the adapter with the cylinder head screw underneath the clamp

Tighten adapter and clamp

Mount the panel element

[1]

d Tube Ø from - up to	Code no.
30 - 34	GN 649.1-30-34
40 - 43	GN 649.1-40-43
48 - 52	GN 649.1-48-52

Specification

- Plastic (Polyamide PA)
  - glasfibre reinforced
  - temperature resistant up to 80 °C
  - grey, matt, RAL 7042
- Flat cylinder head screw DIN 7984-M6
  Steel
  zinc plated, blue passivated
- Blind rivet nut M6
  Steel
  zinc plated, blue passivated
- RoHS compliant

Information

Adapter 649.1 allow panel support clamps GN 649 to be mounted to round tubes.

Mounting the M6 blind rivet nut requires commercial blind rivet nut pliers or a setting tool.

The blind rivet nut and the flat cylinder head screw DIN 7984-M6 are included with the delivery.

How to order [1] GN 649.1-30-34	1	d

Type **F**

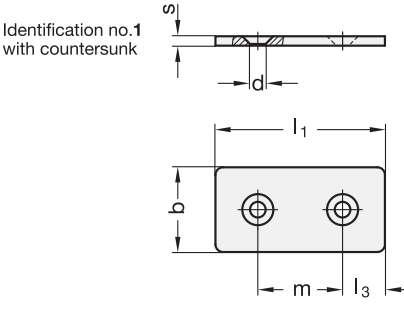

Type **L**

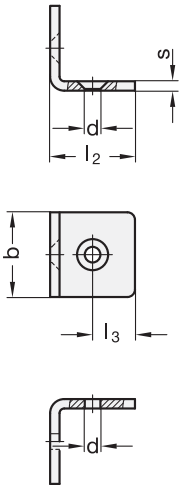

Assembly examples

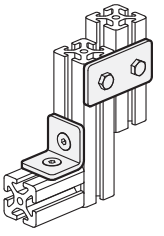

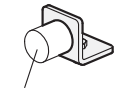

Buffer
GN 352

3 Type
F Shackle
L Angle

4 Identification no.
1 with bore for countersunk screws DIN 7991
2 with bore without countersunk

1 b	2 l_1 Type F	2 l_2 Type L	l_3	m	d	s
20	40	20	10	20	5,2	3
30	60	30	15	30	6,3	4
40	80	40	20	40	8,3	5
45	90	45	22,5	45	8,3	5

Specification

5

- Sheet steel
  - zinc plated, blue passivated **ZB**
  - plastic coated
    black, RAL 9005, textured finish **SW**
    silver, RAL 9006, textured finish **SR**
- RoHS compliant

Information

Angle pieces and shackles GN 967 are preferably used in connection with profile section systems. Square connections or connections with same contact area can so be realised in the smallest of spaces and with a high degree of stability.

Over and above the profile system configurations, the angle pieces and shackles can also be used for a wide variety of different fixing and retaining tasks, for instance in the design of jigs and fixtures.

In the version with identification no. 2 the drill holes are designed without countersunk hole to allow fixing with cylinder head screws, nuts or rivets.

see also...
- *Assembly sets for profile systems 30 / 40 GN 965 → Page 149*
- *Assembly sets for profile systems 30 / 40 / 45 GN 968 → Page 157*

Shackle

1 2 3 4 5
GN 967-40-80-F-1-SW

1	b
2	l_1
3	Type
4	Identification no.
5	Finish

Angle piece

1 2 3 4 5
GN 967-30-30-L-1-SW

1	b
2	l_2
3	Type
4	Identification no.
5	Finish

GN 50.6 Retaining magnets

disc-shaped, with hook / with eyelet

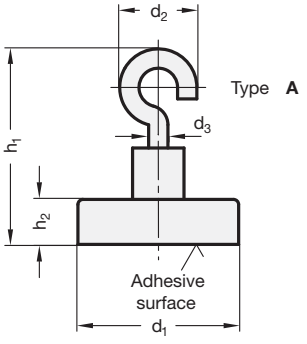

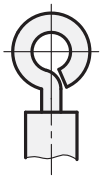

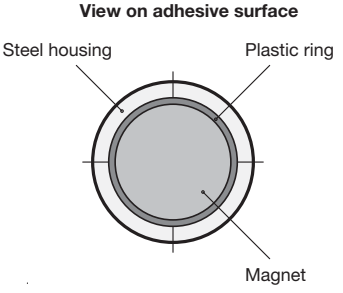

3 Type

A with hook
B with eyelet

2

d_1	d_2 ±1 Type A	d_2 ±1 Type B	d_3	h_1 ±1 Type A	h_1 ±1 Type B	h_2	Nominal adhesive forces in N
16	10	10	3	24,5	24,5	4,5	18
25	13,5	12,5	4	30,5	30,5	7	40
32	13,5	12,5	4	30,5	30,5	7	80
40	13,5	12,5	4	30,5	30,5	8	125
50	13,5	12,5	4	32	35	10	220
63	13,5	12,5	4	36	38	14	350
80	23	20	6	57,5	51,5	18	600

Specification

1

- Housing / threaded bushing / hook / eyelet steel, zinc plated
- Material of the magnet
  Hard ferrite **HF**
- RoHS compliant

Information

Retaining magnets GN 50.6 are a shielded magnetic system.

see also...

- *More information to retaining magnets → Main Catalogue Page 1094*

How to order

1 2 3

GN 50.6-HF-25-A

1	**Material of the magnet**
2	**d_1**
3	**Type**

Version **ND**

Countersunk for $d_1 \leqq 24$

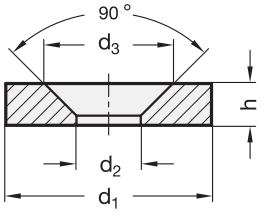

Bore for $d_1 \geqq 32$

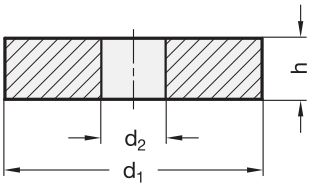

Version **SC**
Bore

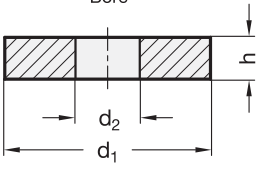

2	3	4	3	4				
	Material of the magnet **SC**		Material of the magnet **ND**			Nominal adhesive forces in N		Packaging units
d_1	d_2 ±0,1	**h** ±0,1	d_2 ±0,1	**h** ±0,1	d_3 +0,5	**SC** Sm Co	**ND** NdFeB	
12 ±0,1	-	-	3,5	3	6,6	-	18	20
15 ±0,1	8	3,5	4,5	3,5	9,3	23	29	20
18 ±0,1	8	4	4,5	4	9,3	31	41	10
24 ±0,1	11,5	4	5,5	4	11,5	51	66	10
32 ±0,1	10	4	10,5	2	-	67	42	5
38 ±0,1	-	-	12	4	-	-	110	2
48 ±0,2	-	-	15	5	-	-	165	1
56 ±0,2	-	-	15	6	-	-	230	1

Specification

1

- Materials of the magnet:
  - SmCo **SC**
    Samarium, cobalt
    temperature resistant up to 200 °C
  - NdFeB **ND**
    Neodymium, iron, boron
    temperature resistant up to 80 °C
- RoHS compliant

On request

- made of hard ferrite (HF)

Information

Raw magnets GN 55.1 are unshielded disc-shaped (annular) magnets.

Owing to their vast range of different magnet materials and sizes, they are suitable for virtually universal use. They are mostly attached by gluing.

When used without air gap, individual raw magnets always have lower adhesive forces than a magnet system in which shielding and magnetic return enormously intensify the force acting at the adhesion surface. Depending on the air gap between magnet and mating component, individual raw magnets - unlike magnet systems - can have substantially higher adhesive forces.

In the event that no suitable retaining magnets / magnet systems are available, raw magnets may be used in combination with appropriate holding constructions to build up highly specific magnet systems.

see also...
- *More information to retaining magnets → Main Catalogue Page 1094*

How to order

1 2 3 4
GN 55.1-ND-38-12-4

1	**Material of the magnet**
2	d_1
3	d_2
4	**h**

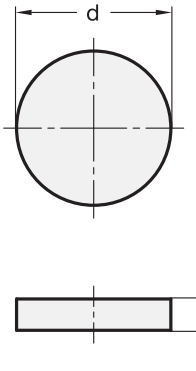

2 **d** ±0,1	3 **h** ±0,1	Nominal adhesive forces in N		Packaging units	
		SC Sm Co	**ND** Nd Fe B	**SC**	**ND**
4	3	2,5	4	20	20
5	3	3,5	5	20	20
6	3	4	7,5	20	20
8	3	8	13	20	20
10	3	10	15	20	20
12	3	11	20	10	20
15	3	16	28	10	20
18	3	25	35	10	10
20	3	-	42	-	10
24	3	36	55	5	10

Specification

1

- Materials of the magnet:
  - SmCo **SC**
    Samarium, cobalt
    temperature resistant up to 200 °C
  - NdFeB **ND**
    Neodymium, iron, boron
    temperature resistant up to 80 °C
- RoHS compliant

On request

- made of hard ferrite (HF)

Information

Raw magnets GN 55.2 are unshielded disc-shaped magnets.

Owing to their vast range of different magnet materials and sizes, they are suitable for virtually universal use. They are mostly attached by gluing.

When used without air gap, individual raw magnets always have lower adhesive forces than a magnet system in which shielding and magnetic return enormously intensify the force acting at the adhesion surface. Depending on the air gap between magnet and mating component, individual raw magnets - unlike magnet systems - can have substantially higher adhesive forces.

In the event that no suitable retaining magnets / magnet systems are available, raw magnets may be used in combination with appropriate holding constructions to build up highly specific magnet systems.

see also...
- *More information to retaining magnets → Main Catalogue Page 1094*

How to order

1 2 3
GN 55.2-ND-24-3

1	**Material of the magnet**
2	**d**
3	**h**

GN 55.3 Raw magnets

rod-shaped

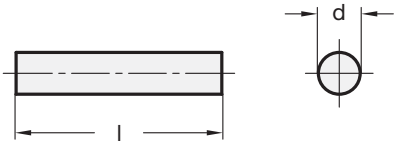

2 d $^{0}_{-0,2}$	3 Length l ±0,1	Nominal adhesive forces in N	Temperature resistance in °C	Packaging units
3	10	1,1	450	10
3	12	1,3	450	10
4	16	1,9	450	10
4	20	2	450	10
5	20	2,3	450	10
6	15	2,8	350	6
6	24	2,8	450	6
6	30	2,8	450	6
8	25	3,8	450	6
8	32	3,8	450	4
10	20	5	350	6
10	40	7	450	2
12	40	8	450	2
12	48	8	450	2
15	30	10	350	2
15	60	11	450	1
20	40	17	350	1
34	80	61	350	1

Specification

1

- Material of the magnet:
  AlNiCo **AN**
  Aluminium, nickel, cobalt
- RoHS compliant

On request

- special lengths

Information

Raw magnets GN 55.3 are unshielded rod-shaped magnets.

Owing to their vast range of different sizes, they are suitable for virtually universal use. They are mostly attached by pressing in or gluing.

When used without air gap, individual raw magnets always have lower adhesive forces than a magnet system in which shielding and magnetic return enormously intensify the force acting at the adhesion surface. Depending on the air gap between magnet and mating component, individual raw magnets - unlike magnet systems - can have substantially higher adhesive forces.

In the event that no suitable retaining magnets / magnet systems are available, raw magnets may be used in combination with appropriate holding constructions to build up highly specific magnet systems.

see also...

- *More information to retaining magnets → Main Catalogue Page 1094*

How to order

1 2 3

GN 55.3-AN-10-40

1	**Material of the magnet**
2	**d**
3	**Length l**

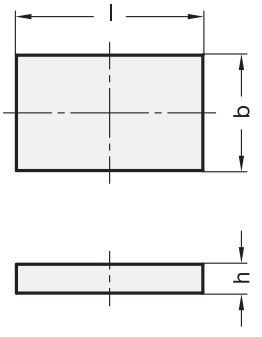

2 Length **l** ±0,1	3 **b** ±0,1	4 **h** ±0,1	Nominal adhesive forces in N		Packaging units
			SC Sm Co	**ND** Nd Fe B	
7,5	4	1,5	3,4	5	10
7,5	6	2	5	8	10
10	7,5	2	7,5	11	10
12	9,5	2,5	11	17	5
16	12,5	2,5	15	24	5
18	16,5	4	29	50	4
26	20,3	5	51	77	2
33	26,3	6,5	85	125	1

Specification

1

- Materials of the magnet:
  - SmCo **SC**
    Samarium, cobalt
    temperature resistant up to 200 °C
  - NdFeB **ND**
    Neodymium, iron, boron
    temperature resistant up to 80 °C
- RoHS compliant

On request

- in other dimensions
- made of hard ferrite (HF)

Information

Raw magnets GN 55.4 are unshielded block-shaped magnets.

Owing to their vast range of different magnet materials and sizes, they are suitable for virtually universal use. They are mostly attached by gluing.

When used without air gap, individual raw magnets always have lower adhesive forces than a magnet system in which shielding and magnetic return enormously intensify the force acting at the adhesion surface. Depending on the air gap between magnet and mating component, individual raw magnets - unlike magnet systems - can have substantially higher adhesive forces.

In the event that no suitable retaining magnets / magnet systems are available, raw magnets may be used in combination with appropriate holding constructions to build up highly specific magnet systems.

see also...
- *More information to retaining magnets → Main Catalogue Page 1094*

How to order

1 2 3 4
GN 55.4-ND-18-16,5-4

1	**Material of the magnet**
2	**Length l**
3	**b**
4	**h**

GN 70 Adhesive discs

for retaining magnets

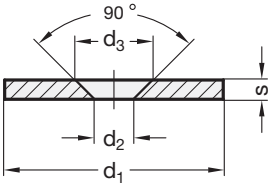

Inox
Stainless
Steel

2 Type

A flat

1

Steel			
d_1	**d_2 +0,3**	**d_3**	**s**
12 ±0,1	4	6,5 -0,2/+0,5	2
17 ±0,1	6	8,5 +0,5	2
27 ±0,2	6	11 +0,5	3
34 +0,3/+0,7	6	11 +0,5	3
45 +0,1/+0,5	5,5	11 +0,5	3
64 ±0,3	6	11 +0,5	3

1

Stainless Steel			
d_1	**d_2 ±0,3**	**d_3 +0,5**	**s**
27 +0,1/+0,5	5,5	11	3
45 ±0,2	6	8,5	2

Specification

3

- Steel zinc plated **ST**
- Stainless Steel magnetic **NI**
- RoHS compliant

Information

Adhesive discs GN 70 are used as companion parts for retaining magnets, e.g. if a magnet is to be used in connection with non-magnetic materials.

They can be fixed with countersunk screws (e.g. DIN 7991), but also with any commercial wood or sheet metal countersunk screws.

How to order		
1 2 3	1	**d_1**
GN 70-27-A-NI	2	**Type**
	3	**Material**

Annexe

Technical information, Tables → *from Page 314*

Numerical Index → *from Page 350*

Keyway, key details

heavy type

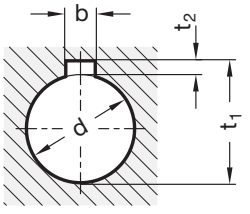

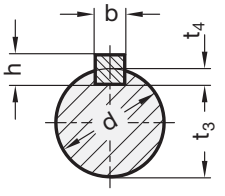

Positioning of the keyway:

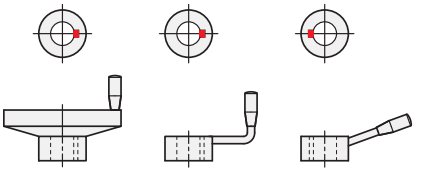

Handwheels | Cranked handles | Control levers

d	**b** P9 / JS9 Hub keyway	**b** P9 / N9 Shaft keyway	h	$t_1 = d + t_2$	t_2	$t_3 = d - t_4$	t_4
6	2	2	2	7	1 +0,1	4,8	1,2 +0,1
7	2	2	2	8	1 +0,1	5,8	1,2 +0,1
8	2	2	2	9	1 +0,1	6,8	1,2 +0,1
9	3	3	3	10,4	1,4 +0,1	7,2	1,8 +0,1
10	3	3	3	11,4	1,4 +0,1	8,2	1,8 +0,1
11	4	4	4	12,8	1,8 +0,1	8,5	2,5 +0,1
12	4	4	4	13,8	1,8 +0,1	9,5	2,5 +0,1
13	5	5	5	15,3	2,3 +0,1	10	3 +0,1
14	5	5	5	16,3	2,3 +0,1	11	3 +0,1
15	5	5	5	17,3	2,3 +0,1	12	3 +0,1
16	5	5	5	18,3	2,3 +0,1	13	3 +0,1
17	5	5	5	19,3	2,3 +0,1	14	3 +0,1
18	6	6	6	20,8	2,8 +0,1	14,5	3,5 +0,1
20	6	6	6	22,8	2,8 +0,1	16,5	3,5 +0,1
22	6	6	6	24,8	2,8 +0,1	18,5	3,5 +0,1
24	8	8	7	27,3	3,3 +0,1	20	4 +0,2
25	8	8	7	28,3	3,3 +0,2	21	4 +0,2
26	8	8	7	29,3	3,3 +0,2	22	4 +0,2
28	8	8	7	31,3	3,3 +0,2	24	4 +0,2
30	8	8	7	33,3	3,3 +0,2	26	4 +0,2
32	10	10	8	35,3	3,3 +0,2	27	5 +0,2
34	10	10	8	37,3	3,3 +0,2	29	5 +0,2
35	10	10	8	38,3	3,3 +0,2	30	5 +0,2
36	10	10	8	39,3	3,3 +0,2	31	5 +0,2
38	10	10	8	41,3	3,3 +0,2	33	5 +0,2
40	12	12	8	43,3	3,3 +0,2	35	5 +0,2
42	12	12	8	45,3	3,3 +0,2	37	5 +0,2
44	12	12	8	47,3	3,3 +0,2	39	5 +0,2

Keyway width

P9 tight fit (standard design)
JS9 or N9 loose fit (requires written agreement)

see also...
• *Keys DIN 6885 → Main Catalogue Page 638*

Keyway, key details

heavy type for machine tools

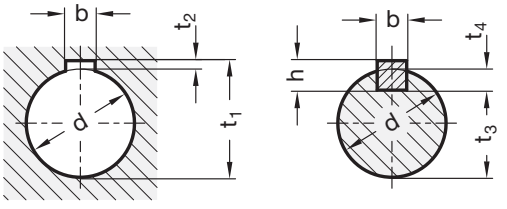

Positioning of the keyway:

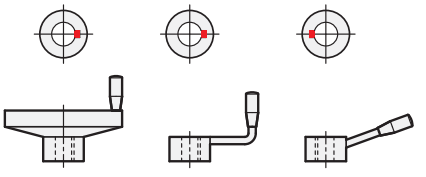

Handwheels Cranked handles Control levers

d	b P9 / JS9 Hub keyway	b P9 / N9 Shaft keyway	h	$t_1 = d + t_2$	t_2	$t_3 = d - t_4$	t_4
11	4	4	4	12,1	1,1 +0,1	8	3 +0,1
12	4	4	4	13,1	1,1 +0,1	9	3 +0,1
13	5	5	5	14,3	1,3 +0,1	9,2	3,8 +0,1
14	5	5	5	15,3	1,3 +0,1	10,2	3,8 +0,1
15	5	5	5	16,3	1,3 +0,1	11,2	3,8 +0,1
16	5	5	5	17,3	1,3 +0,1	12,2	3,8 +0,1
17	5	5	5	18,3	1,3 +0,1	13,2	3,8 +0,1
18	6	6	6	19,7	1,7 +0,1	13,6	4,4 +0,1
20	6	6	6	21,7	1,7 +0,1	15,6	4,4 +0,1
22	6	6	6	23,7	1,7 +0,1	17,6	4,4 +0,1
24	8	8	7	25,7	1,7 +0,1	18,6	5,4 +0,2
25	8	8	7	26,7	1,7 +0,1	19,6	5,4 +0,2
26	8	8	7	27,7	1,7 +0,2	20,6	5,4 +0,2
28	8	8	7	29,7	1,7 +0,2	22,6	5,4 +0,2
30	8	8	7	31,7	1,7 +0,2	24,6	5,4 +0,2
32	10	10	8	34,1	2,1 +0,2	26	6 +0,2
34	10	10	8	36,1	2,1 +0,2	28	6 +0,2
35	10	10	8	37,1	2,1 +0,2	29	6 +0,2
36	10	10	8	38,1	2,1 +0,2	30	6 +0,2
38	10	10	8	40,1	2,1 +0,2	32	6 +0,2
40	12	12	8	42,1	2,1 +0,2	34	6 +0,2
42	12	12	8	44,1	2,1 +0,2	36	6 +0,2
44	12	12	8	46,1	2,1 +0,2	38	6 +0,2
45	14	14	9	47,6	2,6 +0,2	38,5	6,5 +0,2
46	14	14	9	48,6	2,6 +0,2	39,5	6,5 +0,2
48	14	14	9	50,6	2,6 +0,2	41,5	6,5 +0,2
50	14	14	9	52,6	2,6 +0,2	43,5	6,5 +0,2

* This standard has been withdrawn without replacement in 2008-10.

Keyway width

P9 tight fit (standard design)
JS9 or N9 loose fit (requires written agreement)

see also...
• *Keys DIN 6885 → Main Catalogue Page 638*

Squares

for spindles and operating elements

Type **A** external square

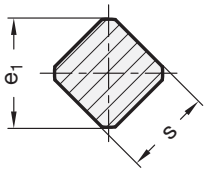

Type **I** internal square

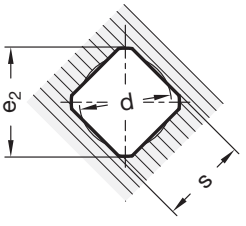

Positioning of the square:

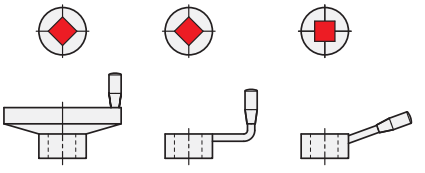

Handwheels | Cranked handles | Control levers

s H11 / h11	**d** max.	**e_1** max.	**e_1** min.	**e_2** min.
4	4,2	5	4,7	5,3
5	5,3	6,5	5,9	6,6
5,5	5,8	7	6,5	7,2
6	6,3	8	7,1	8,1
7	7,3	9	8,3	9,1
8	8,4	10	9,5	10,1
9	9,5	12	10,7	12,1
10	10,5	13	11,9	13,1
11	11,6	14	13,1	14,1
12	12,6	16	14,3	16,1
13	13,7	17	15,5	17,1
14	14,7	18	16,7	18,1
16	16,8	21	19,1	21,2
17	17,9	22	20,3	22,2
19	20	25	22,7	25,2
22	23,1	28	26,3	28,2
24	25,3	32	28,7	32,2
27	28,4	36	32,2	36,2
30	31,7	40	35,8	40,2
32	33,7	42	38,2	42,2
36	38	48	43,1	48,2
41	43,2	54	49,1	54,2
46	48,5	60	55	60,2
50	52,7	65	59,8	65,2
55	57,9	72	65,8	72,2

Information

Internal squares may be relieved in the middle third of each square side. The dimension d max. is designed in such way, that this conditions will be met.

The official standard sheet still lists the squares with s = 60, 65, 70, 75 and 80.

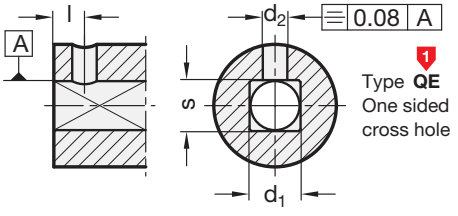

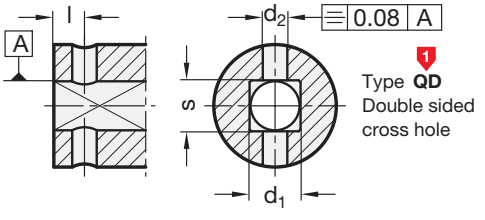

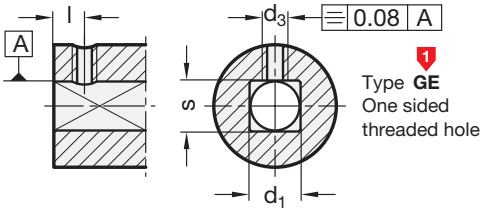

Positioning of the radial cross hole
in relation to keyway / square

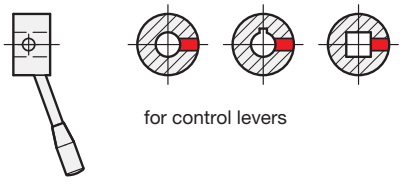

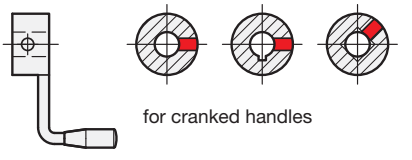

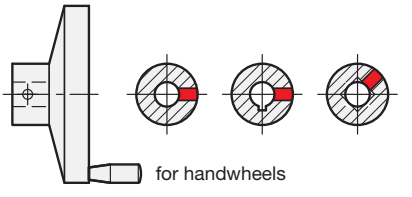

d_1 H7 / **s** H11		**d_2** H11	**d_3**	Length **l** –0,1 Standard version	Length **l** –0,1 Handwheels DIN 950 / GN 949 to Ø 250
6	7	2,5	M 3	4,5	–
8	9	3	M 5	5,5	4,5
10	11	3	M 5	5,5	4,5
12	13	4	M 6	6,5	5,5
14	15	4	M 6	6,5	5,5
16	17	5	M 6	8	7
18	19	5	M 6	8	7
20	21	5	M 6	8	7
22	23	6	M 6	10	9
24	25	6	M 6	10	9
26	27	6	M 6	10	9

Information

The connection between the operating element and the shaft consists very often of a cross pin or a grub screw.

As a result the user is faced with relatively high costs since cross holes on operating elements are in general not readily available.

Components with cross holes to GN 110 are not only offered at very competitive prices but they also save the manufacturer unnecessary drawing work. The geometrical form of some of the operating elements, however, does not lend itself to modification to this particular GN standard.

The radial positioning of the cross holes is only specified as per above three specifications of product groups (control levers, cranked handles, handwheels). For all other operating elements and also for the product group 2.7 (Main Catalogue) it can can be arranged any way.

The pin hole d_2 H11 is drilled to suit drive spring pins.

How to order		
GN 110-QE	1	Handwheel DIN 950-GG-160-B14-A with cross hole **GN 110-QE**

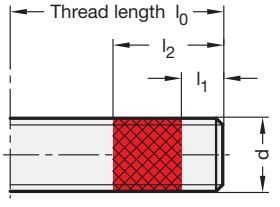

$l_1 \approx$ 2 to 3 x Thread pitch
$l_2 \approx$ 1,5 x d

d	l_1	$l_2 \approx$	M_{IN} in Nm max. insertion torque	M_{LB} in Nm min. breakaway torque	M_{OUT} in Nm max. loosening torque
M 5	1,5 ... 2,5	7,5	0,5	1	6,5
M 6	2 ... 3	9	0,8	1,8	10
M 8	2,5 ... 4	12	1,5	4	26
M 10	3 ... 4,5	15	3	10	55
M 12	3,5 ... 5	18	5	16	95
M 16	4 ... 6	24	11	35	250
M 20	5 ... 7,5	30	14	45	500

The torque value comply with DIN 267 Part 27. They are based on a test of a thread without preload with a nut thread of 6H at room temperature. For thread lengths $l_0 < l_2$, l_2 is reduced in such a way that one to two thread turns are not coated at the end of the thread.

Description

The principle of micro encapsulation MVK (gluing) consists of a liquid plastic material and hardener encapsulated in a thin polymer film which is embedded in a lacquer like carrier deposited in patch form an a thread. This patch dries and the component can be stored and handled in a normal manner.

When fitting a bolt with this patch the two capsules will burst under the pressure and friction between the two threads. The liquid plastic material and hardener will mix leading to a chemical reaction which will harden the glue, thus giving the required thread locking.

The setting of the mixture will start after 10-15 minutes. Sufficient hardness is achieved after about 30 minutes but complete setting is reached after 24 hours.

Adjustment and setting process must be completed within about 5 minutes.

The thread locking can be cracked by applying the M_{OUT} torque on the thread or alternatively by heating the component over +170 °C. It is not recommended to re-use the thread.

Threads, free from oil and grease give increased strength of locking action.

Components treated with this process can be stored for up to 4 years.

Features

- Thread locking to the highest order to prevent the self loosening and component loss even under vibration. Not suitable for adjustable bolts or screws.
- This security aspect may be essential for certain applications of standard parts. Stockholding of liquid glue is eliminated.
- Low insertion torque
- Temperature resistant from –40 °C up to 170 °C
- Excellent chemical stability

How to order for GN 615.3

1

GN 615.3-M8-K-MVK

1 When ordering, the code **MVK** has to follow the product code.

PFB Thread locking with jamming action

Polyamide patch coating (blue/green)

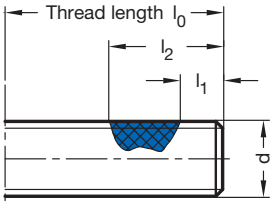

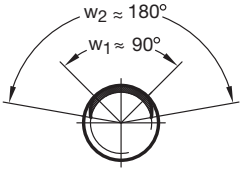

$l_1 \approx$ 2 to 3 x Thread pitch
$l_2 \approx$ 1,5 x d

w_1: Coating core zone
w_2: Coating including edge zone

d	l_1	$l_2 \approx$	M_{IN} in Nm max. 1st insertion torque	M_{OUT} in Nm min. 1st loosening torque
M 3	1 ... 1,5	4,5	0,43	0,1
M 4	1,5 ... 2	6	0,9	0,12
M 5	1,5 ... 2,5	7,5	1,6	0,18
M 6	2 ... 3	9	3	0,35
M 8	2,5 ... 4	12	6	0,85
M 10	3 ... 4,5	15	10,5	1,5
M 12	3,5 ... 5	18	15,5	2,3
M 16	4 ... 6	24	32	4

The torque values are based on a test of a thread without preload with a nut thread 6H at room temperature. For thread lenghts $l_0 < l_2$, l_2 is reduced in such a way that one to two thread turns are not coated at the end of the thread.

Description

The polyamide patch coating PFB is a process whereby an elastic plastic material (Polyamide) is applied to a part of thread which creates a jamming action during the tightening of a nut. The axial play between the bolts and nut thread is taken up by the polyamide thus ensuring maximum surface pressure between the opposite uncoated thread flanks. This process counteracts the loosening and unscrewing on their own.

There is no cure time required, the thread contact is instantaneous resilient. The typical spray edge zone of the polyamide deposit prevents shear blasting.

Threads with polyamide patch coating have unlimited stock life.

Features

- High thread locking action, shakeproof. Excellent convenient for adjusting bolts.
- This security aspect may be essential for certain applications of standard parts. Stock holding of liquid glue is eliminated.
- Multi use is possible whereby the jamming effect after the 5th removal is around 50 % of its original strength.
- Temperature resistant from – 50 °C up to 90 °C (for a short time 120 °C).
- High chemical stability

Information

To mark Types K and KN, the spring plungers GN 615.3 (→ *Main Catalogue Page 481)* are coated in blue; the coating is green for Types KS and KSN (high spring load).

How to order for GN 615.3		
GN 615.3-M8-K-PFB	1	When ordering, the code **PFB** has to follow the product code.

Tightening with thread coating

Precote 5 (white)

Threaded plugs DIN 906

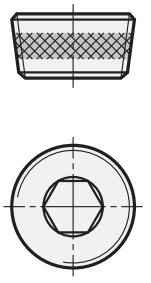

Description

Precote 5 is a non-reactive, film-forming emulsion with mineral solids for coating threaded parts.

The coating generates a seal against gases and liquids in threaded parts, both in cylindrical / cylindrical and in cylindrical / conical pairs. Corrosion in the threaded connection is prevented.

The coating is solvent-free, dry and non-sticky. It is non-hazardous for health.

The minimum storage stability in unmounted state is 4 years.

Features

- The sealing coat is a captive element of the locking screw. It saves storing and mounting locking materials.
- The sealing effect sets in after mounting, no curing time is required.
- The friction rating of the thread remains virtually constant, the working-loose torque is low, max. reusable once.
- Sealing effect of thread:
  cylindrical / cylindrical < 15 bar
  cylindrical / conical > 50 bar
- Temperature resistance: from – 50 °C to 180 °C
- Good chemical resistance, e.g. against oils, water, petrol and solvents

How to order		
DIN 906-ST-R¾-GPC [1]	1	When ordering, the code **GPC** has to follow the product code.

	Strength classes of screws						
	4.6	**5.6**	**5.8**	**6.8**	**8.8**	**10.9**	**12.9**
Nominal tensile strength $R_{m, nom.}$ in N/mm²	400	500	500	600	800	1000	1200
Lower yield point R_{eL} in N/mm²	240	300	400	480	–	–	–
0,2 %-Yield limit $R_{p\ 0.2}$ in N/mm²	–	–	–	–	640	900	1080
Tension under test force S_p in N/mm²	225	280	380	440	580	830	970
Elongation A in %	22	20	–	–	12	9	8

Features

The strength class identification number consists of two numerals:

- The first number corresponds to $^1/_{100}$ of the nominal tensile strength in N/mm² (see table)
- The second number shows ten times the ratio of lower yield point R_{eL} (or 0.2 %-yield limit $R_{p\ 0,2}$) to the nominal tensile strength $R_{m, nom}$ (yield point ratio).

Example: Strength class 5.8 means:
Minimum tensile strength R_m = 500 N/mm²,
Minimum yield point R_{eL} = 400 N/mm²

Also, multiplying both numerals results in $^1/_{10}$ of the yield point in N/mm².

Test tension S_p in N/mm² **for thread**	Strength classes of nuts				
	5	**6**	**8**	**10**	**12**
... M 4	520	600	800	1040	1150
above M 4 ... M 7	580	670	855	1040	1150
above M 7 ... M 10	590	680	870	1040	1160
above M 10 ... M 16	610	700	880	1050	1190
above M 16 ... M 39	630	720	920	1060	1200

Features

The designation of a strength class consists of a identification number which provides information on the test tension of the material used:

Identification number x 100 = Test tension S_p

The test tension is equal to the minimum tensile strength in N/mm² of a screw which, if paired with the appropriate nut, can be loaded up to the minimum yield point of the screw.

Example: Screw 8.8 – Nut 8, connection can be loaded up to the minimum yield point of the screw.

DIN ISO 286
Extract Part 1

ISO-Fundamental tolerances
Numerical values

Tol. grades IT	Nominal size range												
	— ... 3	> 3 ... 6	> 6 ... 10	> 10 ... 18	> 18 ... 30	> 30 ... 50	> 50 ... 80	> 80 ... 120	> 120 ... 180	> 180 ... 250	> 250 ... 315	> 315 ... 400	> 400 ... 500
01	0,3	0,4	0,4	0,5	0,6	0,6	0,8	1	1,2	2	2,5	3	4
0	0,5	0,6	0,6	0,8	1	1	1,2	1,5	2	3	4	5	6
1	0,8	1	1	1,2	1,5	1,5	2	2,5	3,5	4,5	6	7	8
2	1,2	1,5	1,5	2	2,5	2,5	3	4	5	7	8	9	10
3	2	2,5	2,5	3	4	4	5	6	8	10	12	13	15
4	3	4	4	5	6	7	8	10	12	14	16	18	20
5	4	5	6	8	9	11	13	15	18	20	23	25	27
6	6	8	9	11	13	16	19	22	25	29	32	36	40
7	10	12	15	18	21	25	30	35	40	46	52	57	63
8	14	18	22	27	33	39	46	54	63	72	81	89	97
9	25	30	36	43	52	62	74	87	100	115	130	140	155
10	40	48	58	70	84	100	120	140	160	185	210	230	250
11	60	75	90	110	130	160	190	220	250	290	320	360	400
12	100	120	150	180	210	250	300	350	400	460	520	570	630
13	140	180	220	270	330	390	460	540	630	720	810	890	970
14	250	300	360	430	520	620	740	870	1000	1150	1300	1400	1550
15	400	480	580	700	840	1000	1200	1400	1600	1850	2100	2300	2500
16	600	750	900	1100	1300	1600	1900	2200	2500	2900	3200	3600	4000
17	1000	1200	1500	1800	2100	2500	3000	3500	4000	4600	5200	5700	6300
18	1400	1800	2200	2700	3300	3900	4600	5400	6300	7200	8100	2200	9700

Tolerances in µm

Description

This ISO Standard represents the basis for a system of limiting sizes and fits whereby the table mirrors the calculated values of fundamental tolerances in connection with fundamental dimensions.

The use of this table is limited to smooth circular cylindrical workpieces or such with two parallel fitting planes or contact areas.

The numerical values attributed to an ISO tolerance grade (IT) specify the size of the tolerance and hence the tolerance field. With ascending numbers, the size of the tolerance increases.

For identification purposes of the position of the tolerance field in relation to the nominal dimension (zero), the number chosen as tolerance grade IT is preceded by a letter.

Tolerance area H is the most common value for bores. It specifies that the minimum dimension of the bore corresponds to the nominal dimension. The permissible maximum dimension corresponds to the nominal dimension plus the IT tolerance.

Examples

Bore 20 H7 = $20\ ^{+0,021}_{0}$
min. dimension: 20,000
max. dimension: 20,021

Bore 8 H11 = $8\ ^{+0,090}_{0}$
min. dimension: 8,000
max. dimension: 8,090

ISO-Fundamental tolerances

for bores and shafts

Tolerance classes for bore	Nominal size range									
	– ... 3	> 3 ... 6	> 6 ... 10	> 10 ... 18	> 18 ... 30	> 30 ... 50	> 50 ... 80	> 80 ... 120	> 120 ... 180	> 180 ... 250
D 9	+ 45 + 20	+ 60 + 30	+ 76 + 40	+ 93 + 50	+ 117 + 65	+ 142 + 80	+ 174 + 100	+ 207 + 120	+ 245 + 145	+ 285 + 170
D 12	+ 120 + 20	+ 150 + 30	+ 190 + 40	+ 230 + 50	+ 275 + 65	+ 330 + 80	+ 400 + 100	+ 470 + 120	+ 545 + 145	+ 630 + 170
E 8	+ 28 + 14	+ 38 + 20	+ 47 + 25	+ 59 + 32	+ 73 + 40	+ 89 + 50	+ 106 + 60	+ 126 + 72	+ 148 + 85	+ 172 + 100
F 7	+ 16 + 6	+ 22 + 10	+ 28 + 13	+ 34 + 16	+ 41 + 20	+ 50 + 25	+ 60 + 30	+ 71 + 36	+ 83 + 43	+ 96 + 50
G 6	+ 8 + 2	+ 12 + 4	+ 14 + 5	+ 17 + 6	+ 20 + 7	+ 25 + 9	+ 29 + 10	+ 34 + 12	+ 39 + 14	+ 44 + 15
G 7	+ 12 + 2	+ 16 + 4	+ 20 + 5	+ 24 + 6	+ 28 + 7	+ 34 + 9	+ 40 + 10	+ 47 + 12	+ 54 + 14	+ 61 + 15
H 7	+ 10 0	+ 12 0	+ 15 0	+ 18 0	+ 21 0	+ 25 0	+ 30 0	+ 35 0	+ 40 0	+ 46 0
H 8	+ 14 0	+ 18 0	+ 22 0	+ 27 0	+ 33 0	+ 39 0	+ 46 0	+ 54 0	+ 63 0	+ 72 0
H 9	+ 25 0	+ 30 0	+ 36 0	+ 43 0	+ 52 0	+ 62 0	+ 74 0	+ 87 0	+ 100 0	+ 115 0
H 10	+ 40 0	+ 48 0	+ 58 0	+ 70 0	+ 84 0	+ 100 0	+ 120 0	+ 140 0	+ 160 0	+ 185 0
H 11	+ 60 0	+ 75 0	+ 90 0	+ 110 0	+ 130 0	+ 160 0	+ 190 0	+ 220 0	+ 250 0	+ 290 0
H 12	+ 100 0	+ 120 0	+ 150 0	+ 180 0	+ 210 0	+ 250 0	+ 300 0	+ 350 0	+ 400 0	+ 460 0
H 13	+ 140 0	+ 180 0	+ 220 0	+ 270 0	+ 330 0	+ 390 0	+ 460 0	+ 540 0	+ 630 0	+ 720 0
H 14	+ 250 0	+ 300 0	+ 360 0	+ 430 0	+ 520 0	+ 620 0	+ 740 0	+ 870 0	+1000 0	+1150 0
JS 9	+ 12,5 – 12,5	+ 15 – 15	+ 18 – 18	+ 21,5 – 21,5	+ 26 – 26	+ 31 – 31	+ 37 – 37	+ 43,5 – 43,5	+ 50 – 50	+ 57,5 – 57,5
N 9	– 4 – 29	0 – 30	0 – 36	0 – 43	0 – 52	0 – 62	0 – 74	0 – 87	0 – 100	0 – 115
P 9	– 6 – 31	– 12 – 42	– 15 – 51	– 18 – 61	– 22 – 74	– 26 – 88	– 32 – 106	– 37 – 124	– 43 – 143	– 50 – 165

Tolerances in µm

Tolerance classes for shaft	Nominal size range									
	– ... 3	> 3 ... 6	> 6 ... 10	> 10 ... 18	> 18 ... 30	> 30 ... 50	> 50 ... 80	> 80 ... 120	> 120 ... 180	> 180 ... 250
f 7	– 6 – 16	– 10 – 22	– 13 – 28	– 16 – 34	– 20 – 41	– 25 – 50	– 30 – 60	– 36 – 71	– 43 – 83	– 50 – 96
f 9	– 6 – 31	– 10 – 40	– 13 – 49	– 16 – 59	– 20 – 72	– 25 – 87	– 30 – 104	– 36 – 123	– 43 – 143	– 50 – 165
g 6	– 2 – 8	– 4 – 12	– 5 – 14	– 6 – 17	– 7 – 20	– 9 – 25	– 10 – 29	– 12 – 34	– 14 – 39	– 15 – 44
h 6	0 – 6	0 – 8	0 – 9	0 – 11	0 – 13	0 – 16	0 – 19	0 – 22	0 – 25	0 – 29
h 7	0 – 10	0 – 12	0 – 15	0 – 18	0 – 21	0 – 25	0 – 30	0 – 35	0 – 40	0 – 46
h 8	0 – 14	0 – 18	0 – 22	0 – 27	0 – 33	0 – 39	0 – 46	0 – 54	0 – 63	0 – 72
h 9	0 – 25	0 – 30	0 – 36	0 – 43	0 – 52	0 – 62	0 – 74	0 – 87	0 – 100	0 – 115
h 11	0 – 60	0 – 75	0 – 90	0 – 110	0 – 130	0 – 160	0 – 190	0 – 220	0 – 250	0 – 290
h 13	0 – 140	0 – 180	0 – 220	0 – 270	0 – 330	0 – 390	0 – 460	0 – 540	0 – 630	0 – 720
h 14	0 – 250	0 – 300	0 – 360	0 – 430	0 – 520	0 – 620	0 – 740	0 – 870	0 –1000	0 –1150
js 14	+ 125 – 125	+ 150 – 150	+ 180 – 180	+ 215 – 215	+ 260 – 260	+ 310 – 310	+ 370 – 370	+ 435 – 435	+ 500 – 500	+ 575 – 575
n 6	+ 10 + 4	+ 16 + 8	+ 19 + 10	+ 23 + 12	+ 28 + 15	+ 33 + 17	+ 39 + 20	+ 45 + 23	+ 52 + 27	+ 60 + 31
p 6	+ 12 + 6	+ 20 + 12	+ 24 + 15	+ 29 + 18	+ 35 + 22	+ 42 + 26	+ 51 + 32	+ 59 + 37	+ 68 + 43	+ 79 + 50

Tolerances in µm

Metric ISO thread

Tolerance fields 6g / 6H

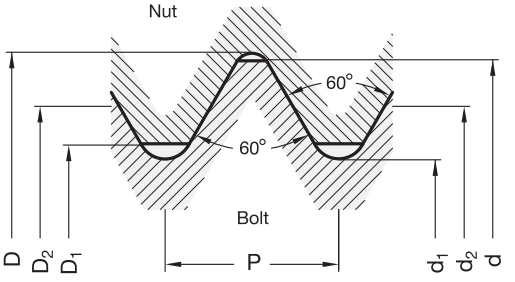

Nominal thread-Ø	Gradient P	Bolt thread 6g						Nut thread 6H					
		Major-Ø d		Pitch-Ø d_2		Minor-Ø d_1		Major-Ø D		Pitch-Ø D_2		Minor-Ø D_1	
		max.	min.	max.	min.	max.	min.	min.	max.	min.	max.	min.	max.
M 3	0,5	2,980	2,874	2,655	2,580	2,367	2,273	3,000	not specified	2,675	2,775	2,459	2,599
M 4	0,7	3,978	3,838	3,523	3,433	3,119	3,002	4,000		3,545	3,663	3,242	3,422
M 5	0,8	4,976	4,826	4,456	4,361	3,995	3,869	5,000		4,480	4,605	4,134	4,334
M 6	1	5,974	5,794	5,324	5,212	4,747	4,596	6,000		5,350	5,500	4,917	5,153
M 8	1,25	7,972	7,760	7,160	7,042	6,438	6,272	8,000		7,188	7,348	6,647	6,912
M 10	1,5	9,968	9,732	8,994	8,862	8,128	7,938	10,000		9,026	9,206	8,376	8,676
M 12	1,75	11,966	11,701	10,829	10,679	9,819	9,602	12,000		10,863	11,063	10,106	10,441
M 14	2	13,962	13,682	12,663	12,503	11,508	11,271	14,000		12,701	12,913	11,835	12,210
M 16	2	15,962	15,682	14,663	14,503	13,508	13,274	16,000		14,701	14,913	13,835	14,210
M 20	2,5	19,958	19,623	18,334	18,164	16,891	16,625	20,000		18,376	18,600	17,294	17,744
M 24	3	23,952	23,577	22,003	21,803	20,271	19,955	24,000		22,051	22,316	20,752	21,252

Description

The limiting sizes for standard threads given in the table comply with

- tolerance field **6g** for bolt threads
- tolerance field **6H** for nut threads.

The metric steel and metal threads specified in this catalogue are based on the tolerance fields given above.

For threads in plastic standard parts (without steel or metallic thread insert) this tolerances can as a rule not be maintained for production-orientated reasons.

DIN 13
Extract

Metric ISO fine thread
Tolerance fields 6g / 6H

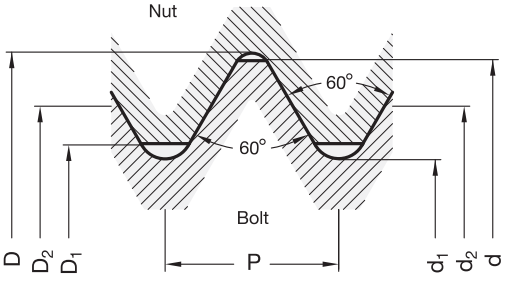

Nominal thread-Ø	Gradient P	Bolt thread 6g						Nut thread 6H					
		Major-Ø d		Pitch-Ø d_2		Minor-Ø d_1		Major-Ø D		Pitch-Ø D_2		Minor-Ø D_1	
		max.	min.	max.	min.	max.	min.	min.	max.	min.	max.	min.	max.
M 5	0,5	4,980	4,874	4,655	4,580	4,367	4,273	5,000	not specified	4,675	4,775	4,459	4,599
M 6	0,5	5,980	5,874	5,655	5,570	5,367	5,263	6,000		5,675	5,787	5,459	5,599
M 8	0,5	7,980	7,874	7,655	7,570	7,367	7,263	8,000		7,675	7,787	7,459	7,599
M 10	0,5	9,980	9,874	9,655	9,570	9,367	9,263	10,000		9,675	9,787	9,459	9,599
M 12	0,5	11,980	11,874	11,655	11,565	11,367	11,258	12,000		11,675	11,793	11,459	11,599
M 6	0,75	5,978	5,838	5,491	5,391	5,058	4,929	6,000		5,513	5,645	5,188	5,378
M 8	0,75	7,978	7,838	7,491	7,391	7,058	6,929	8,000		7,513	7,645	7,188	7,378
M 10	0,75	9,978	9,838	9,491	9,391	9,058	8,929	10,000		9,513	9,645	9,188	9,378
M 12	0,75	11,978	11,838	11,491	11,385	11,058	10,923	12,000		11,513	11,653	11,188	11,378
M 16	0,75	15,978	15,838	15,491	15,385	15,058	14,923	16,000		15,513	15,653	15,188	15,378
M 8	1	7,974	7,794	7,324	7,212	6,747	6,596	8,000		7,350	7,500	6,917	7,153
M 10	1	9,974	9,794	9,324	9,212	8,747	8,596	10,000		9,350	9,500	8,917	9,153
M 12	1	11,974	11,794	11,324	11,206	10,747	10,590	12,000		11,350	11,510	10,917	11,153
M 16	1	15,974	15,794	15,324	15,206	14,747	14,590	16,000		15,350	15,510	14,917	15,153
M 20	1	19,974	19,794	19,324	19,206	18,747	18,590	20,000		19,350	19,510	18,917	19,153
M 12	1,5	11,968	11,732	10,994	10,854	10,128	9,930	12,000		11,026	11,216	10,376	10,676
M 14	1,5	13,968	13,732	12,994	12,854	12,128	11,930	14,000		13,026	13,216	12,376	12,676
M 16	1,5	15,968	15,732	14,994	14,854	14,128	13,930	16,000		15,026	15,216	14,376	14,676
M 18	1,5	17,968	17,732	16,994	16,854	16,128	15,930	18,000		17,026	17,216	16,376	16,676
M 20	1,5	19,968	19,732	18,994	18,854	18,128	17,930	20,000		19,026	19,216	18,376	18,676
M 22	1,5	21,968	21,732	20,994	20,854	20,128	19,930	22,000		21,026	21,216	20,376	20,676
M 26	1,5	25,968	25,732	24,994	24,844	24,128	23,920	26,000		25,026	25,226	24,376	24,676
M 27	1,5	26,968	26,732	25,994	25,844	25,128	24,920	27,000		26,026	26,226	25,376	25,676
M 30	1,5	29,968	29,732	28,994	28,844	28,128	27,920	30,000		29,026	29,226	28,376	28,676
M 35	1,5	34,968	34,732	33,994	33,844	33,128	32,920	35,000		34,026	34,226	33,376	33,676
M 40	1,5	39,968	39,732	38,994	38,844	38,128	37,920	40,000		39,026	39,226	38,376	38,676
M 20	2	19,962	19,682	18,663	18,503	17,508	17,271	20,000		18,701	18,913	17,835	18,210
M 24	2	23,962	23,682	22,663	22,493	21,508	21,261	24,000		22,701	22,925	21,835	22,210
M 30	2	29,962	29,682	28,663	28,493	27,508	27,261	30,000		28,701	28,925	27,835	28,210
M 36	2	35,962	35,682	34,663	34,493	33,508	33,261	36,000		34,701	34,925	33,835	34,210
M 42	2	41,962	41,682	40,663	40,493	39,508	39,261	42,000		40,701	40,925	39,835	40,210

Description

The limiting sizes for standard threads given in the table comply with
- tolerance field **6g** for bolt threads
- tolerance field **6H** for nut threads.

The metric steel and metal threads specified in this catalogue are based on the tolerance fields given above.

For threads in plastic standard parts (without steel or metallic thread insert) this tolerances can as a rule not be maintained for production-orientated reasons.

Pipe threads

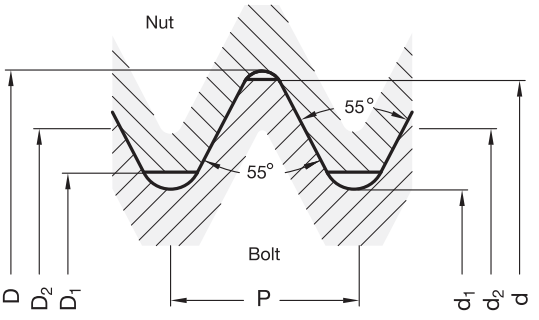

Nominal thread size	Gradient P		Bolt thread							Nut thread					
			Major-Ø d		Pitch-Ø d_2			Minor-Ø d_1		Major-Ø D		Pitch-Ø D_2		Minor-Ø D_1	
	Number of gears of 25,4 mm	equal to mm	max.	min.	max.	min. A	min. B	max.	min.	max.	min.	min.	max.	min.	max.
G ⅛	28	0,907	9,728	9,514	9,174	9,040	8,933	8,566	not specified	not specified	9,728	9,254	9,147	8,848	8,566
G ¼	19	1,337	13,157	12,907	12,301	12,176	12,051	11,445			13,157	12,426	12,301	11,890	11,445
G ⅜	19	1,337	16,662	16,412	15,806	15,681	15,556	14,950			16,662	15,931	15,806	15,395	14,950
G ½	14	1,814	20,955	20,671	19,793	19,651	19,509	18,631			20,955	19,935	19,793	19,172	18,631
G ⅝	14	1,814	22,911	22,627	21,749	21,607	21,465	20,587			22,911	21,891	21,749	21,128	20,587
G ¾	14	1,814	26,441	26,157	25,279	25,137	24,995	24,117			26,441	25,421	25,279	24,658	24,117
G ⅞	14	1,814	30,201	29,917	29,039	28,897	28,755	27,877			30,201	29,181	29,039	28,418	27,877
G 1	11	2,309	33,249	32,889	31,770	31,590	31,410	30,291			33,249	31,950	31,770	30,931	30,291
G 1⅛	11	2,309	37,897	37,537	36,418	36,238	36,058	34,939			37,897	36,598	36,418	35,579	34,939
G 1¼	11	2,309	41,910	41,550	40,431	40,251	40,071	38,952			41,910	40,611	40,431	39,592	38,952
G 1½	11	2,309	47,803	47,443	46,324	46,144	45,964	44,845			47,803	46,504	46,324	45,485	44,845
G 1¾	11	2,309	53,746	53,386	52,267	52,087	51,907	50,788			53,746	52,447	52,267	51,428	50,788
G 2	11	2,309	59,614	59,254	58,135	57,955	57,775	56,656			59,614	58,315	58,135	57,296	56,656

Description

The pitch-diameter d_2 of the bolt thread has 2 tolerance classes, namely A and B.

The nut thread has only 1 tolerance class.

The metal pipe threads listed in this catalogue are made in the "more accurate" tolerance class A.

For threads in plastic standard parts this tolerance class can as a rule not be maintained for production-orientated reasons.

DIN VDE 0470-1 | IP-Protection classes

Extracts IEC 529

First identification number: Degree of protection (protection against foreign particles)		
0		No special protection
1		Protection against ingress of solid foreign particles with a diameter larger than 50 mm
2		Protection against ingress of solid foreign particles with a diameter larger than 12 mm
3		Protection against ingress of solid foreign particles with a diameter larger than 2,5 mm
4		Protection against ingress of solid foreign particles with a diameter larger than 1 mm
5		Protection against damaging dust deposits. Dust penetration is not fully prevented, but the proper function of the equipment must not be jeopardised (dust-protected)
6		Protection against dust penetration (dust-proof)

This standard addresses the protection of electrical equipment by means of housings, covers, and similar.

The degrees of protection (extract) are used in analogy with the different position indicators.

Second identification number: Degree of protection (water protection)		
0		No special protection
1		Protection against vertically falling drops of water
2	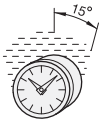	Protection against dripping water falling at an angle of up to 15°
3	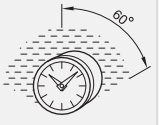	Protection against dripping water falling at an angle of up to 60° (spray water)
4		Protection against water hitting from all directions (splash water)
5		Protection against water jets projected by a nozzle from any direction (jet water)
6		Protection against heavy seas or powerful water jets
7	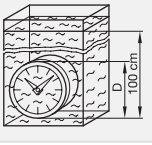	Protection against immersion in water under stated conditions of pressure and time
8	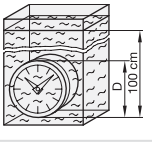	Suitable for permanent immersion under specified conditions

Strength values of plastic handwheels

in ascending order of the standard numbers

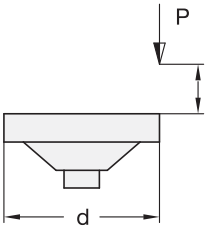

Impact strength
S = P x h

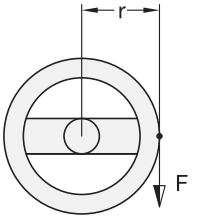

Failure moment
M = F x r

An extensive series of tests has been carried out to determine the strength values of the plastic handwheels listed below. The results provide information on the impact strength and the torque at which the handwheels break. With a maximum known transmitted torque, the safety factor can be determined.

The impact strength S is determined as shown in the outline drawing opposite:

The handwheel is firmly clamped at its steel hub. A cylindrical steel element rounded at the tip (0.680 kg in weight) repeatedly hits the wheel rim, with the height of fall h increasing by 0.1 m after every fall. Failure occurs at the listed S values.

The details given on strength are non-binding guide values without any liability. In general, they do not constitute a warranty of quality. The user must determine from case to case if a product is suitable for the intended purpose or use.

Disc handwheels GN 520 / GN 520.6 → *Main Catalogue Page 162*										
d in mm	50	63	80	100	125	150	175	200	250	300
S in J	3	4	8	11	14	19	27	36	40	48
M in Nm	55	75	90	150	300	300	500	700	1300	1500

Disc handwheels GN 521 → *Main Catalogue Page 156*										
d in mm	80	100	125	150	175	200	250	300		
S in J	6	13	25	26	26	27	30	30		
M in Nm	34	60	125	180	195	320	500	500		

Handwheels with retractable handle GN 521.3 → *Main Catalogue Page 157*										
d in mm	80	100	125	150	175	200	250	300		
S in J	6	14	14	15	20	27	30	30		
M in Nm	34	60	125	180	195	320	500	500		

Spoked handwheels GN 522 / Handwheels with retractable handle GN 522.3 → *Main Catalogue Page 160*										
d in mm	80	100	125	160	200	250	300	375		
S in J	5	7	10	15	24	28	36	40		
M in Nm	32	54	94	185	300	420	480	480		

Spoked handwheels GN 555 → *Main Catalogue Page 187*										
d in mm	100	125	140	160	200	250	300			
S in J	5	8	12	12	16	19	33			
M in Nm	67	120	165	165	300	405	800			

Strength values of plastic cranked handles

in ascending order of the standard numbers

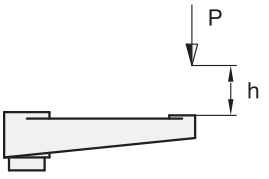

Impact strength S = P x h

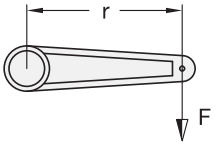

Failure moment M = F x r

An extensive series of tests has been carried out to determine the strength values of the plastic cranked handles listed below. The results provide information on the impact strength and the torque at which the cranked handles break. With a maximum known transmitted torque, the safety factor can be determined.

The impact strength S is determined as shown in the outline drawing opposite:

The cranked handle is firmly clamped at its steel hub. A cylindrical steel element rounded at the tip (0.680 kg in weight) repeatedly hits the crank arm, with the height of fall h increasing by 0.1 m after every fall. Failure occurs at the listed S values.

The details given on strength are non-binding guide values without any liability. In general, they do not constitute a warranty of quality. The user must determine from case to case if a product is suitable for the intended purpose or use.

Cranked handles GN 570.2 → *Page 50*							
r in mm	**50**	**64**	**80**	**100**	**130**	**160**	
S in J	7	11	15	27	45	55	
M in Nm	80	120	200	210	350	470	

Material properties of Elastomers (rubber)

International symbol	NR	NBR	CR	FPM, FKM	TPE	PUR
Trade name		Perbunan®	Neoprene®	Viton®	Santoprene®	Bayflex®
Chemical name	Natural rubber	Acrylonitrile-butadiene rubber	Chloroprene rubber	Fluorine rubber Fluorine caoutchouc	Thermoplastic rubber	Polyurethane
Hardness (Shore-A)	30 … 90	25 … 95	30 … 90	65 … 90	55 … 87	65 … 90
Temperature resistance • short-term • long-term	 −60° … +130 °C −40° … + 80 °C	 −40° … +150 °C −30° … +120 °C	 −30° … +150 °C −20° … +120 °C	 −30° … +280 °C −20° … +230 °C	 −40° … +150 °C −30° … +125 °C	 −40° … +130 °C −25° … +100 °C
Tensile strength in N/mm²	–	25	25	20	8,5	20
Wear-/ abrasion resistance	good	good	good	good	good	excellent
Resistance to: • Oil, greases • Solvents • Acids • Alkalines • Fuel	 not suitable low low low not suitable	 outstanding partly good restricted good good	 good partly good good very good slight	 good very good very good very good outstanding	 good outstanding outstanding outstanding good	 very good satisfactory not suitable not suitable good
General	NR is a material with very good physical properties and excellent mechanical strength. Use e.g. for spring elements. Please note: natural rubber has a characteristic smell.	NBR is a synthetic special rubber for rubber parts with high requirements for resistance to swelling when in contact with oils and fuels. Standard material for o-rings.	CR is one of the most frequently used synthetic rubbers with a wide range of applications for parts which require exceptional resistance to ageing, atmospheric and environmental influences.	FPM is unmatched for applications with contact to fuels, oils, solvents, as well as many acids and caustic solutions; resistant to atmospheric and environmental influences. Due to its high price its use is restricted to high quality rubber parts which are exposed to extremely heavy wear. Viton® is a registered trademark of DuPont performance rubbers.	TPE is a thermoplastic rubber, the performance characteristics of which are comparable to those of many customary vulcanised special rubbers. TPE is a multi-purpose material with outstanding dynamic fatigue strength and excellent resistance to ozone and atmospheric influences (environmental influences).	PUR is known for exceptionally good mechanical characteristics with very good resistance to atmospheric and environmental influences. In addition, the extreme resistance to tearing and to wear, should also be mentioned.

Material characteristics of Duroplast and Technopolymer

The plastic materials used for GANTER / ELESA products can be classed in three main groups:

Duroplast	Technopolymer	Elastomers Thermoplastic Elastomers
This group includes plastic materials which solidify by chemical reactions. They closely crosslink into spatial lattice patterns of macromolecules which gives Duroplast material high mechanical strength and surface hardness. Their elasticity is low, however. The curing process is irreversible. Unlike Technopolymer, Duroplast cannot be melted because it is rigid up to degradation temperature. Phenolic resins are among the most commonly used Duroplast materials. In general, the molecular crosslinking of Duroplast creates good chemical stability. The colouring options of components made of Duroplast are limited.	With increasing temperature and once the softening point is exceeded, this group of Technopolymer melts, can be heat distorted and solidifies again after cooling. This process can be repeated any number of times. Unlike Duroplast, there is no chemical reaction during processing. Technopolymer materials can be subdivided into amorphous and partially crystalline plastics. The disordered structure of amorphous materials allows the production of transparent components by injection moulding right through to crystal-clear parts. Partially crystalline Technopolymer have a structure resulting in enhanced mechanical properties and temperatures of use. The wide variety of different Technopolymer and their options of modifications allow the production of “tailor-made” construction materials with respect to mechanical properties, chemical resistance, temperature resistance and different colours.	The group of elastomers includes materials which can be stretched and bent without exerting great force. Once the deforming force relaxes or no longer acts at all, the parts take their original shape. In chemical terms, these are macromolecules which are interconnected by only a few chemical crosslinking bridges. By way of modification, elastomers can be made in varying degrees of hardness. They can be dyed easily by adding colour pigments.

Information

The above details are general values without claiming to be complete. Material properties may vary widely through additives, modifications and environmental influence factors.

The details are unsuitable as the sole basis for constructions. The data may not be used in place of tests to determine the suitability of a material for a specific purpose. Reference is made at this point to the mechanical strength values of various plastic products which have been determined by tests. → *Main Catalogue Page 1138 ff.*

No warranty or liability will be accepted fort the above specifications and details.

The essential plastic materials used for GANTER / ELESA products are listed in the tables below.

Material characteristics of Duroplast and Technopolymer

	Duroplast	Technopolymer		
Symbol	PF 31	PA 6	PA 6 GF30	PA-T
Description	Phenolic resin	Polyamide	Polyamide with 30 % glass fibre	Polyamide transparent
Specimen condition	–	dry / air humid	dry / air humid	–
Yield stress	–	80 / 50	– / –	90
Tensile strength in MPa*	60	– / –	180 / 110	–
Tension-E-Module in MPa*	9000	3000 / 1500	9000 / 6500	2800
Ball indentation hardness in MPa*	250	150 / 70	220 / 150	140
Temperature resistance:				
• max. short-term	180 °C	180 °C	200 °C	180 °C
• max. long-term	140 °C	90 °C	120 °C	90 °C
• min. application temperature	–20 °C	–40 °C	–40 °C	–30 °C
Resistance to:				
• Oil, greases	+	+	+	+
• Solvents (Tri / Per)	o	+ / +	+ / +	+ / +
• Acids (weak/strong)	+ / –	o / –	o / –	– / –
• Alkalines (weak/strong)	+ / –	+ / o	o / –	+ / +
• Petrol	+	+	+	+
• Alcohol	+	+	+	–
• Hot water	o	o	o	–
• UV light / weather exposure	–	o	o	o
Fire behaviour (UL 94)	V-0	HB	HB	V-2
General	This Duroplast material on phenolic resin basis with organic filler has the following properties: High stiffness and hardness, low tendency to creep, high heat forming resistance, low thermal linear expansion, high surface slip resilience, low flammability. Phenolic resins are available only in dark colour shades. They are not suitable for use with food. Typical applications include thermally insulating operating elements.	The material group polyamide 6 (partially crystalline) offers universal materials for mechanical function components in mechanical engineering. Polyamides are: - cold-temperature resistant - impact stress resilient and impact resistant - abrasion resistant Reinforced polyamides such as PA 6 GF30 combine high stiffness and rigidity with extreme impact strength, properties which make them highly robust under mechanical stress. Polyamide PA-T (amorphous) is translucent with a slightly yellow transparency. Typically used for oil level sight glass.		

*MPa = Megapascal, + resistant, o conditionally resistant, – non-resistant

Material characteristics of Duroplast and Technopolymer

	Technopolymer			
Symbol	PP GF20	PC	POM-C	POM-H
Description	Polypropylene with 20 % glass fibre	Polycarbonate	Polyacetal (Copolymer)	Polyacetal (Homopolymer)
Specimen condition	–	–	–	–
Yield stress	33	63	65	72
Tensile strength in MPa*	–	–	–	70
Tension-E-Module in MPa*	2900	2400	2700	3100
Ball indentation hardness in MPa*	80	110	145	174
Temperature resistance:				
• max. short-term	140 °C	140 °C	140 °C	140 °C
• max. long-term	100 °C	125 °C	90 °C	80 °C
• min. application temperature	0 °C	–100 °C	–50 °C	–50 °C
Resistance to:				
• Oil, greases	+	o	+	+
• Solvents (Tri/Per)	o/o	–/–	–/+	–/+
• Acids (weak/strong)	+/+	+/–	+/–	+/–
• Alkalines (weak/strong)	+/+	–/–	+/+	+/+
• Petrol	+	–	+	+
• Alcohol	+	o	+	+
• Hot water	+	–	+	o
• UV light / weather exposure	o	o	o	o
Fire behaviour (UL 94)	–	V-2	HB	HB
General	Propylenes (partially crystalline) are universal standard plastic materials with balanced property levels: Average strength, stiffness, impact resistance, low density, excellent chemical resistance but very bad cold temperature properties. Embedded glass fibre, e.g. PP GF20, enhances stiffness and strength. Typical applications for propylenes are armatures.	Polycarbonates (amorphous) are translucent plastic materials with following properties: High strength, in particular high impact resistance, good optical properties, self-extinguishing. But: sensitive to chemicals and stress cracking, not suitable for high dynamic stress loads, notch sensitive at edges and corners.	Polyacetals (partially crystalline) are universal materials used in function components for precision engineering and in apparatus construction. They feature excellent properties: - low friction resistance - good abrasion resistance - good resilience - good fatigue resistance - good chemical resistance Typical applications include snap-fit elements (form-locking connecting elements).	

*MPa = Megapascal, + resistant, o conditionally resistant, – non-resistant

Material characteristics of Stainless Steel

AISI Standard	304	303	CF-8 (Precision casting)	301
German Material No.	1.4301	1.4305	1.4308	1.4310
DIN / EN-Number	EN 10088-1; -2; -3	EN 10088-1; -2; -3	EN 10283	EN 10088-1; -2; -3
Symbol	X 5 CrNi 18-10	X 8 CrNiS 18-9	GX 5CrNi 19-10	X 10 CrNi 18-8
Alloying components %	C ≤ 0,07 % Si ≤ 1,0 % Mn ≤ 2,0 % P ≤ 0,045 % S ≤ 0,030 % Cr 17,0 … 19,5 % Ni 8,0 … 10,5 %	C ≤ 0,10 % Si ≤ 1,0 % Mn ≤ 2,0 % P ≤ 0,045 % S ≤ 0,15 … 0,35 % Cr 17,0 … 19,0 % Ni 8,0 … 10,0 %	C ≤ 0,07 % Si ≤ 1,50 % Mn ≤ 1,5 % P ≤ 0,040 % S ≤ 0,03 % Cr 18,0 … 20,0 % Ni 8,0 … 11,0 %	C ≤ 0,05 … 0,15 % Si ≤ 2,0 % Mn ≤ 2,0 % P ≤ 0,045 % S ≤ 0,015 % Mo ≤ 0,8 % Cr 16,0 … 19,0 % Ni 6,0 … 9,5 %
Minimum tensile strength **Rm** in N/mm²	500 … 700	500 … 700	440 … 640	500 … 750
Yield strength **$Rp_{0,2}$** in N/mm²	≥ 190	≥ 190	≥ 175	≥ 195
Machinability	medium	very good	medium	poor
Forgeability	good	poor	–	good
Weldability	excellent	poor	good	good
Special characteristics	antimagnetic structure suitable for low temperatures, can be used up to + 700 °C	antimagnetic structure	antimagnetic, austenitic structure	austenitic structure
Corrosion resistance	good Resistant to corrosion in the natural environment: water, rural and urban atmospheres without significant chloride or acid concentrations, in food areas and in agricultural food areas.	medium Due to the sulphur content reservations in environments which contain acids and chlorides.	good Resistant to corrosion, Material is largely comparable with AISI 304.	good Resistant to corrosion in the natural environment: water, rural, urban and industrial atmospheres.
Main areas of application	Food industry Agriculture Chemical industry Vehicle construction Construction industry Machine construction Decorative purposes (Kitchen equipment)	Vehicle construction Electronics Decorative purposes (Kitchen equipment)	Food industry Beverage industry Packaging industry Fittings Pumps Agitators	Springs for temperatures up to 300 °C Tools (knives) Plates for vehicle construction Chemical and food industry

The characteristics described should be treated as guidelines only. No guarantee is made. The exact conditions of use have to be taken into account individually.

Material characteristics of Stainless Steel

AISI Standard	316L Sintered Material	630	304 Cu
German Material No.	1.4404	1.4542	1.4567
DIN / EN-Number	(Sint C40)	EN 10088-3	EN 10088-1; -3
Symbol	X 2 CrNiMo 17-12-2	–	X 3 CrNiCu 18-9-4
Alloying components %	C ≤ 0,08 % Si ≤ 0,9 % Mn ≤ 0,1 % Mo 2,0 … 4,0 Cr 16,0 … 19,0 Ni 10,0 … 14,0 %	C ≤ 0,06 % Si ≤ 0,6 % Mn ≤ 1,0 % P ≤ 0,03 % S ≤ 0,025 % Cr 15,0 … 16,5 % Mo ≤ 0,5 % Ni 4,0 … 5,0 %	C ≤ 0,04 % Si ≤ 1,0 % Mn ≤ 2,0 % P ≤ 0,045 % S ≤ 0,03 % Cr 17,0 … 19,0 % Ni 8,5 … 10,5 %
Minimum tensile strength R_m in N/mm²	330	800 ... 1300	450 ... 650
Yield strength $Rp_{0,2}$ in N/mm²	≥ 250	500 ... 1100	≥ 175
Machinability	–	poor	excellent
Forgeability	–	good	good
Weldability	–	good	very good
Special characteristics	antimagnetic structure	hardenable (precipitation hardening)	antimagnetic structure, suitable for low temperatures
Corrosion resistance	medium By virtue of its coarser porosity the corrosion resistance is in general reduced as compared with Stainless Steel. Reservations especially in acid and salty environment.	good Corrosion resistance comparable with AISI 304. Insensitive to intergranular corrosion.	very good Resistant to corrosion in the natural environment: water, rural and urban atmospheres without significant acid concentrations, in food areas and in agricultural food areas.
Main areas of application	Paint, oil, soap and textile industry Electronics Decorative purposes (Kitchen equipment)	Shipbuilding Food industry Construction engineering Automotive industry	Food industry Agriculture Chemical industry Machine construction Shipbuilding Electronics Decorative purposes (Kitchen equipment)

The characteristics described should be treated as guidelines only. No guarantee is made. The exact conditions of use have to be taken into account individually.

Strength values of cabinet "U" handles in plastic

in ascending order of the standard numbers

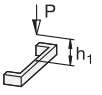

Impact strength
$S_1 = P \times h_1$

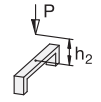

Impact strength
$S_2 = P \times h_2$

Breaking load K_1

Breaking load K_2

An extensive series of tests were carried out to determine the strength values of the plastic cabinet "U" handles listed below. The results provide information on the impact strength and the breaking load under normal stress loads in 2 stress load directions.

The impact strength S_1 respectively S_2 was determined shown in the outline drawing opposite:

A cylindrical steel element rounded at the tip (0.680 kg in weight) repeatedly hits the handle, with the height of fall h increasing by 0.1 mm after every fall. Failure occurs at the listed S values.

The details given on strength are non-binding guide values without any liability. In general, they do not constitute a warranty of quality. The user must determine from case to case if a product is suitable for the intended purpose.

Cabinet "U" handles GN 528-PA → *Main Catalogue Page 70*								
Size	**94**	**117**	**122**	**132**	**140**	**160**	**179**	**235**
S_1 in J	15	20	25	27	27	29	33	40
S_2 in J	8	13	14	14	20	20	20	34
K_1 in N	3500	4500	3700	3500	3400	3300	2800	3200
K_2 in N	2500	2500	2500	2500	2600	2700	2700	3500

Cabinet "U" handles GN 528-PP → *Main Catalogue Page 70*								
Size	**94**	**117**	**122**	**132**	**140**	**160**	**179**	**235**
S_1 in J	8	10	12	12	13	15	16	17
S_2 in J	3	4	5	5	6	7	8	11
K_1 in N	1700	2000	1600	2000	1800	1800	1800	1700
K_2 in N	1300	1500	1500	1300	1300	1300	1300	1700

Cabinet "U" handles GN 528-SV → *Main Catalogue Page 70*								
Size	**94**	**117**	**132**	**179**				
S_1 in J	9	10	12	20				
S_2 in J	5	8	8	13				
K_1 in N	1750	3500	3000	1400				
K_2 in N	1700	2200	1800	2100				

Cabinet "U" handles GN 528-ESD → *Main Catalogue Page 70*								
Size	**94**	**117**						
S_1 in J	15	20						
S_2 in J	8	13						
K_1 in N	3500	4500						
K_2 in N	2500	2500						

Cabinet "U" handles GN 528.1-PP → *Main Catalogue Page 72*								
Size	**117**							
S_1 in J	9							
S_2 in J	4							
K_1 in N	1900							
K_2 in N	950							

Strength values of cabinet "U" handles in plastic

in ascending order of the standard numbers

Cabinet "U" handles GN 528.1-PP → *Main Catalogue Page 72*									
Size	**117**								
S_1 in J	9								
S_2 in J	4								
K_1 in N	1900								
K_2 in N	950								

Cabinet "U" handles GN 625 → *Main Catalogue Page 66*									
Size	**86**	**117**	**179**	**300**					
S_1 in J	50	50	27	25					
S_2 in J	120	120	80	75					
K_1 in N	4000	4000	3000	2000					
K_2 in N	7000	5000	3500	3000					

Cabinet "U" handles GN 628 → *Main Catalogue Page 78*									
Size	**94**	**117**	**132**	**150**	**179**				
S_1 in J	8	10	11	12	16				
S_2 in J	3	4	4	5	9				
K_1 in N	2000	2700	2700	2700	2200				
K_2 in N	1500	1800	1800	1500	1500				

Cabinet "U" handles GN 725 → *Main Catalogue Page 68*									
Size	**86**	**94**	**117**	**120**	**132**	**150**	**179**	**235**	**300**
S_1 in J	12	10	8	8	8	8	11	11	18
S_2 in J	6	8	12	12	12	13	13	13	11
K_1 in N	2400	2300	2250	2250	2200	2000	1900	1900	2000
K_2 in N	2400	2300	2650	2650	2450	2550	2000	2000	2000

Cabinet "U" handles GN 725.1 → *Page 33*									
Size	**117**	**179**							
S_1 in J	11	11							
S_2 in J	9	13							
K_1 in N	2000	1900							
K_2 in N	2800	1900							

Load rating of cabinet "U" handles / tubular handles in metal

in ascending order of the standard numbers

Load capacity L_1 in N

Load capacity L_2 in N

Extensive test series were carried out with the cabinet "U" handles / tubular handles listed below.

The handles were slowly loaded and relieved at room temperature with incrementally increasing force. After load relieve, a deformation irrelevant in terms of function and appearance remained at the listed values for L_1 and L_2 respectively. The breaking loads were in most cases multiples above the specified value.

Note:

The details given on load rating are non-binding guide values without any liability. In general, they do not constitute a warranty of quality.

The user must determine from case to case if a product is suitable for the envisaged use. Ambient factors and ageing may influence the specified values.

Tubular handles GN 331 → *Main Catalogue Page 100*								
Size	**30-200**	**30-300**						
L_1	3000	2400						
L_2	4000	3700						

Tubular handles GN 332 → *Main Catalogue Page 106*								
Size	**30-200**	**30-300**						
L_1	2500	2250						
L_2	3500	3400						

Tubular handles GN 333 → *Page 41*								
Size	**20-200**	**20-250**	**20-300**	**20-350**	**20-400**			
L_1	1700	1500	1200	800	500			
L_2	2800	2500	2000	1500	500			
Size	**28-200**	**28-250**	**28-300**	**28-350**	**28-400**	**28-500**	**28-600**	
L_1	2500	2250	2000	1750	1650	1575	1500	
L_2	4750	4250	3750	3250	2750	2250	1500	
Size	**30-200**	**30-300**	**30-350**	**30-400**	**30-500**	**30-600**	**30-1000**	
L_1	2500	2250	2200	2200	2000	1800	750	
L_2	3500	3400	3200	2850	2250	1900	800	

Tubular handles GN 333.1 → *Main Catalogue Page 96*								
Size	**20-180**	**20-200**	**20-250**	**20-300**	**20-350**	**20-400**		
L_1	1600	1500	1400	1250	750	700		
L_2	2500	2000	1900	1600	1550	1250		
Size	**28-200**	**28-250**	**28-300**	**28-350**	**28-400**	**28-500**	**28-600**	
L_1	1700	1500	1500	1350	1000	1000	1000	
L_2	4800	3500	2800	2400	1800	1700	1500	
Size	**30-200**	**30-300**	**30-350**	**30-400**	**30-500**	**30-600**	**30-1000**	
L_1	3000	2400	2400	2350	2350	1750	1250	
L_2	4000	3700	3000	2700	2300	2000	1000	

Load rating of cabinet "U" handles / tubular handles in metal

in ascending order of the standard numbers

Tubular handles GN 333.2 → *Main Catalogue Page 104*								
Size	**242**	**292**	**392**	**492**	**592**	**600**		
L_1	2400	2200	2000	1900	1600	1450		
L_2	3700	3200	2400	2200	1650	2500		

Tubular handles GN 333.3 → *Main Catalogue Page 99*								
Size	**242**	**292**	**392**	**492**	**592**	**600**		
L_1	1800	1700	1650	1600	1500	1450		
L_2	3500	3000	2500	2000	1500	2500		

Stainless Steel-Tubular handles GN 333.5 → *Main Catalogue Page 98*								
Size	**200**	**250**	**300**	**400**	**500**	**600**		
L_1	3000	2500	2000	1750	1500	1450		
L_2	7500	6000	5000	4250	3500	2500		

Oval tubular handles GN 334 → *Main Catalogue Page 114*								
Size	**200**	**250**	**300**	**350**	**400**	**500**	**600**	**800**
L_1	1750	1650	1500	1500	1250	1200	1100	700
L_2	3000	2400	1750	1750	1500	1350	1000	700

Oval tubular handles GN 334.1 → *Main Catalogue Page 115*								
Size	**200**	**250**	**300**	**350**	**400**	**500**	**600**	**800**
L_1	1700	1650	1500	1450	1400	1200	1000	750
L_2	3000	2700	2500	2000	1500	1250	1000	750

Oval tubular handles GN 366 → *Main Catalogue Page 117*								
Size	**200**	**250**	**300**	**400**	**500**	**600**		
L_1	2000	2000	2000	1500	1300	900		
L_2	3500	2800	2250	1600	1450	1150		

"U" handles GN 423 - Type A → *Page 40*								
Size	**55**	**88**	**100**	**120**	**180**	235		
L_1	270	250	220	200	180	150		
L_2	1700	1500	1000	600	500	250		

"U" handles GN 423 - Type B → *Page 40*								
Size	**55**	**88**	**100**	**120**	**180**	235		
L_1	270	250	220	200	180	150		
L_2	1600	1250	800	400	300	200		

Arch handles GN 424.1 → *Main Catalogue Page 85*								
Size	**64**	**96**	**128**	**160**	**192**			
L_1	1300	800	800	700	525			
L_2	6500	5250	2700	2000	1550			

Stainless Steel-Arch handles GN 424.5 → *Main Catalogue Page 85*								
Size	**64**	**96**	**128**	**160**	**192**			
L_1	1500	900	900	800	600			
L_2	7500	5750	3000	2250	1750			

Load rating of cabinet "U" handles / tubular handles in metal

in ascending order of the standard numbers - L_1 / L_2 → *Page 338*

Cabinet "U" handles, Steel GN 425 → *Main Catalogue Page 80*								
Size	**8-55**	**8-64**	**8-88**	**8-96**	**8-100**	**8-120**	**8-128**	
L_1	475	550	500	500	500	450	500	
L_2	5000	4300	3300	3000	2800	1750	1250	
Size	**10-88**	**10-100**	**10-120**	**10-180**	**10-200**	**10-235**		
L_1	1300	900	900	700	500	400		
L_2	4000	3750	3000	2000	1200	1150		

Aluminium-Cabinet "U" handles GN 425 → *Main Catalogue Page 80*								
Size	**8-55**	**8-64**	**8-88**	**8-96**	**8-100**	**8-120**	**8-128**	
L_1	300	300	300	200	200	200	200	
L_2	1400	1200	825	750	700	575	450	
Size	**10-88**	**10-100**	**10-120**	**10-180**	**10-200**	**10-235**		
L_1	500	450	400	350	250	250		
L_2	2000	1500	1000	700	600	500		
Size	**12-125**	**12-160**	**12-200**	**12-250**				
L_1	400	300	250	200				
L_2	2000	1000	800	800				
Size	**16-160**	**16-200**	**16-250**	**16-300**				
L_1	800	750	500	250				
L_2	2300	2000	1500	1000				

Stainless Steel-Cabinet "U" handles GN 425 → *Main Catalogue Page 82*								
Size	**8-64**	**8-88**	**8-96**	**8-100**	**8-120**	**8-128**		
L_1	600	850	700	700	700	700		
L_2	4000	3000	2500	2000	1500	1300		
Size	**10-88**	**10-100**	**10-120**	**10-180**	**10-200**	**10-235**		
L_1	1400	1000	1000	700	600	500		
L_2	4000	3800	3000	2250	1500	1400		
Size	**12-125**	**12-160**	**12-200**	**12-250**				
L_1	1200	1000	700	500				
L_2	7000	4500	3000	2500				
Size	**16-160**	**16-200**	**16-250**	**16-300**				
L_1	1900	1300	1100	800				
L_2	8500	7000	5000	4000				

Cabinet "U" handles, Steel GN 425.1 → *Main Catalogue Page 86*								
Size	**10-88**	**10-100**	**10-120**					
L_1	1000	900	900					
L_2	2000	1500	1500					

Stainless Steel-Cabinet "U" handles GN 425.1 → *Main Catalogue Page 86*								
Size	**10-88**	**10-100**	**10-120**					
L_1	1500	1450	1450					
L_2	2150	2000	2000					

Folding handles, Steel GN 425.2 → *Main Catalogue Page 87*								
Size	**100**	**120**	**180**					
L_1	1750	1600	1250					
L_2	2600	2600	2500					

Load rating of cabinet "U" handles / tubular handles in metal

in ascending order of the standard numbers - L_1 / L_2 → *Page 338*

Stainless Steel-Folding handles GN 425.2 → *Main Catalogue Page 87*								
Size	**100**	**120**	**180**					
L_1	2000	2000	1750					
L_2	5000	3500	2250					

Folding handles, Steel GN 425.5 → *Main Catalogue Page 90*								
Size	**100**	**120**	**180**					
L_1	500	500	500					
L_2	–	–	–					

Stainless Steel-Folding handles GN 425.5 → *Main Catalogue Page 90*								
Size	**100**	**120**	**180**					
L_1	500	500	500					
L_2	–	–	–					

Folding handles with recessed tray GN 425.8 → *Main Catalogue Page 88*								
Size	**100**	**120**						
L_1	1000	1000						
L_2	5000	5000						

Cabinet "U" handles GN 426 → *Main Catalogue Page 92*								
Size	**20-200**	**20-250**	**20-300**	**20-350**	**28-250**	**28-300**	**28-350**	**28-400**
L_1	1400	1100	1100	1000	2000	1900	1800	1500
L_2	3300	3000	2300	2200	4500	3500	3500	3500

Cabinet "U" handles GN 426.1 → *Main Catalogue Page 93*								
Size	**20-200**	**20-300**	**28-250**	**28-350**	**28-500**			
L_1	1500	1450	3000	2500	2300			
L_2	1600	1400	2000	2000	2000			

Stainless Steel-Cabinet "U" handles GN 426.5 - Type A → *Page 37*								
Size	**28-250**	**28-300**	**28-400**					
L_1	4000	3500	2750					
L_2	8000	7250	6500					

Stainless Steel-Cabinet "U" handles GN 426.5 - Type B → *Page 37*								
Size	**28-250**	**28-300**	**28-400**					
L_1	2700	2700	2700					
L_2	10000	7000	5000					

Cabinet "U" handles GN 427 → *Main Catalogue Page 91*								
Size	**55**	**88**	**100**	**120**	**180**	**200**	**235**	
L_1	650	600	500	450	300	250	200	
L_2	1600	1150	1100	1000	550	500	400	

Stainless Steel-Cabinet "U" handles GN 427.5 → *Main Catalogue Page 91*								
Size	**55**	**88**	**100**	**120**	**180**	**200**	**235**	
L_1	2400	2100	2000	1800	1250	850	800	
L_2	6000	5000	3750	3000	1700	1500	1200	

Load rating of cabinet "U" handles / tubular handles in metal

in ascending order of the standard numbers

Load capacity L_1 in N

Load capacity L_2 in N

Extensive test series were carried out with the cabinet "U" handles / tubular handles listed below.

The handles were slowly loaded and relieved at room temperature with incrementally increasing force. After load relieve, a deformation irrelevant in terms of function and appearance remained at the listed values for L_1 and L_2 respectively. The breaking loads were in most cases multiples above the specified value.

Note:

The details given on load rating are non-binding guide values without any liability. In general, they do not constitute a warranty of quality.

The user must determine from case to case if a product is suitable for the envisaged use. Ambient factors and ageing may influence the specified values.

Cabinet "U" handles GN 559 - Type A → *Main Catalogue Page 76*								
Size	**162**							
L_1	5000							
L_2	8000							

Cabinet "U" handles GN 559 - Type B → *Main Catalogue Page 76*								
Size	**162**							
L_1	1000							
L_2	2500							

Cabinet "U" handles GN 564 → *Main Catalogue Page 69*								
Size	**112**	**128**	**160**					
L_1	900	900	900					
L_2	1200	1200	1200					

Cabinet "U" handles GN 565 → *Page 30*								
Size	**20-100**	**20-112**	**20-117**	**20-120**	**20-128**	**20-160**		
L_1	1250	1250	1250	1250	1250	1200		
L_2	2100	2200	2200	2200	2200	2000		
Size	**26-112**	**26-117**	**26-120**	**26-125**	**26-128**	**26-160**	**26-179**	**26-192**
L_1	3000	2900	2900	2800	2800	2800	2400	2300
L_2	7000	6000	5500	5000	4500	3500	3250	3000
Size	**26-300**	**26-400**	**26-500**					
L_1	1700	1600	1200					
L_2	2250	1750	1500					

Cabinet "U" handles GN 565.1 → *Page 31*								
Size	**20-100**	**20-112**	**20-128**	**20-160**				
L_1	1000	1200	1000	1100				
L_2	2500	2400	2300	2000				
Size	**26-116**	**26-132**	**26-164**	**26-179**	**26-196**			
L_1	2000	2000	2000	*1800*	1750			
L_2	5000	4000	3600	*3400*	3000			

Load rating of cabinet "U" handles / tubular handles in metal

in ascending order of the standard numbers - L_1 / L_2 → *Page 338*

Inclined cabinet "U" handles GN 565.2 → *Main Catalogue Page 64*								
Size	**20-112**	**20-128**	**26-128**	**26-160**				
L_1	1900	1900	2400	2000				
L_2	2400	2000	5200	4800				

Cabinet "U" handles GN 565.3 → *Page 35*								
Size	**20-120**							
L_1	1400							
L_2	1900							

Arch handles GN 565.4 → *Main Catalogue Page 65*								
Size	**20-160**	**20-192**	**26-160**	**26-192**				
L_1	1300	1000	2000	2000				
L_2	3500	2500	5000	5000				

Stainless Steel-Cabinet "U" handles GN 565.5 → *Page 32*								
Size	**20-112**	**20-128**	**20-160**	**20-200**	**20-250**	**20-300**	**20-350**	**20-400**
L_1	4000	3200	3100	3000	2800	2500	2000	1500
L_2	7000	6000	4000	3800	3000	3000	2300	1500

Stainless Steel-Arch handles GN 565.9 → *Main Catalogue Page 65*								
Size	**20-160**	**20-192**						
L_1	4500	2500						
L_2	4500	2500						

Arch handles GN 665 → *Main Catalogue Page 121*								
Size	**26-350**	**26-450**						
L_1	1200	1100						
L_2	2700	1550						

Tubular handles GN 666 (Tube, Aluminium) → *Main Catalogue Page 109*								
Size	**200**	**250**	**300**	**350**	**400**	**500**	**600**	
L_1	900	850	950	1000	1000	1100	1000	
L_2	2500	2450	2400	2300	1750	1700	1350	

Tubular handles GN 666 (Tube, Stainless Steel) → *Main Catalogue Page 109*								
Size	**200**	**250**	**300**	**350**	**400**	**500**	**600**	
L_1	900	850	950	1000	1000	1100	1000	
L_2	2500	2450	2400	2300	1750	1700	1350	

Tubular handles GN 666.1 (Tube, Aluminium) → *Main Catalogue Page 110*								
Size	**200**	**250**	**300**	**350**	**400**	**500**	**600**	
L_1	1000	1350	1500	1500	1750	1750	1500	
L_2	5500	5500	5250	4500	4500	3500	2500	

Tubular handles GN 666.1 (Tube Stainless Steel) → *Main Catalogue Page 110*								
Size	**200**	**250**	**300**	**350**	**400**	**500**	**600**	
L_1	1150	1150	1200	1200	1150	1100	1000	
L_2	3000	3000	2750	2500	2000	1850	1350	

Load rating of cabinet "U" handles / tubular handles in metal

in ascending order of the standard numbers - L_1 / L_2 → *Page 338*

Tubular arch handles GN 666.4 (Tube, Aluminium) → *Main Catalogue Page 120*								
Size	**400**	**500**	**600**					
L_1	750	750	750					
L_2	1800	1700	1500					

Tubular arch handles GN 666.4 (Tube, Stainless Steel) → *Main Catalogue Page 120*								
Size	**400**	**500**	**600**					
L_1	1350	1700	1750					
L_2	5000	4500	3750					

Stainless Steel-Tubular handles GN 666.5 → *Main Catalogue Page 112*								
Size	**200**	**250**	**300**	**400**	**500**	**600**		
L_1	2300	2200	2100	2000	1800	1700		
L_2	4500	4300	4000	3700	3500	2000		

Stainless Steel-Tubular handles GN 666.7 → *Main Catalogue Page 112*								
Size	**200**	**250**	**300**	**400**	**500**	**600**		
L_1	2300	2200	2100	2000	1800	1700		
L_2	4500	4400	4000	3600	3500	2000		

Cabinet "U" handles GN 667 (Tube, Aluminium) → *Main Catalogue Page 111*								
Size	**20-180**	**20-200**	**20-250**	**20-300**	**20-350**	**20-400**		
L_1	750	750	600	600	550	500		
L_2	2000	2000	2000	1500	1250	1000		
Size	**30-300**	**30-350**	**30-400**	**30-500**	**30-600**	**30-700**	**30-1000**	
L_1	1100	1100	750	750	750	625	550	
L_2	3000	2250	2250	1750	1500	1250	1000	

Cabinet "U" handles GN 667 (Tube, Stainless Steel) → *Main Catalogue Page 111*								
Size	**20-180**	**20-200**	**20-250**	**20-300**	**20-350**	**20-400**		
L_1	1200	1100	1000	1000	750	700		
L_2	4000	3500	3500	2500	2000	1000		
Size	**30-300**	**30-350**	**30-400**	**30-500**	**30-600**	**30-700**	**30-1000**	
L_1	1250	1250	1200	1200	1200	900	800	
L_2	5000	5000	4250	4000	2250	2000	1000	

Flat cabinet "U" handles GN 668 - Type A → *Main Catalogue Page 75*								
Size	**130**	**170**	**190**	**210**				
L_1	1600	1600	1500	1350				
L_2	2100	1900	1800	1650				

Flat cabinet "U" handles GN 668 - Type B → *Main Catalogue Page 75*								
Size	**130**	**170**	**190**	**210**				
L_1	700	650	600	550				
L_2	2400	2000	1600	1200				

System handles GN 669 → *Main Catalogue Page 118*								
Size	**200**	**250**	**300**	**400**	**500**	**600**		
L_1	1750	1500	1250	1200	1000	900		
L_2	3000	2250	2100	2000	1500	1000		

Load rating of cabinet "U" handles / tubular handles in metal

in ascending order of the standard numbers - L_1 / L_2 → *Page 338*

Cabinet "U" handles GN 728 → *Main Catalogue Page 73*								
Size	**120**	**180**						
L_1	2000	2500						
L_2	2500	2750						

Stainless Steel-Cabinet "U" handles GN 728.5 → *Main Catalogue Page 73*								
Size	**120**							
L_1	2500							
L_2	5000							

Load rating of plastic hinges

in ascending order of the standard numbers

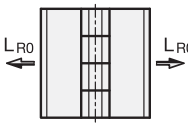

Radial load rating L_{R0} in N

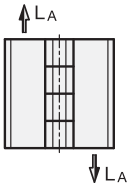

Axial load rating L_A in N

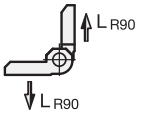

Load rating at 90 ° L_{R90} in N

The values given in (...) are the breaking loads determined in a series of tests. They are designed to estimate the safety factor.

When attaching the different hinges, a maximum tightening torque must not be exceeded.

The details given on load rating are non-binding guide values without any liability. In general, they do not constitute a warranty of quality. The user must determine from case to case if a product is suitable for the intended purpose.

Article No.	Radial load rating L_{R0} in N		L_{R90} in N		Axial load rating L_A in N		Max. tightening torque of the hinge attachment in Nm		
							Bore	Thread	Bolt
GN 151 -39-40-A	240	(2220)	100	(730)	200	(2050)	–	5	–
-39-40-B	230	(1760)	180	(1330)	137	(1800)	1	–	–
-39-40-C	290	(2030)	280	(1520)	130	(2080)	1	–	–
-48-49-A	440	(3070)	170	(1470)	400	(3770)	–	5	–
-48-49-B	310	(2530)	250	(1620)	360	(3080)	2	–	–
-48-49-C	310	(2880)	320	(2490)	300	(2960)	2	–	–
-48-49-D	360	(1970)	200	(1680)	370	(3070)	–	–	5
-48-49-E	320	(1970)	200	(1620)	360	(3070)	2	–	5
-48-49-F	280	(1970)	200	(1680)	370	(2960)	2	–	5
-48-49-G	360	(1970)	200	(1470)	370	(3070)	–	5	5
-48-49-H	320	(2530)	170	(1470)	360	(3080)	2	5	–
-48-49-I	280	(2880)	170	(1470)	400	(2960)	2	5	–
-64-65-A	690	(5670)	220	(2280)	640	(4570)	–	5	–
-64-65-B	490	(5790)	260	(3190)	510	(5280)	5	–	–
-64-65-C	720	(6270)	240	(4180)	520	(4760)	3	–	–
-64-65-D	460	(6620)	220	(3190)	510	(5890)	–	–	5
-64-65-E	460	(5790)	220	(3190)	510	(5280)	3	–	5
-64-65-F	460	(6270)	220	(3190)	510	(4760)	5	–	5
-64-65-G	460	(5670)	220	(2280)	510	(4570)	–	5	5
-64-65-H	460	(5670)	220	(2280)	510	(4570)	5	5	–
-64-65-I	690	(5670)	220	(2280)	640	(4570)	3	5	–
-98-98-A	2120	(17940)	590	(5210)	970	(7660)	–	5	–
-98-98-B	2060	(13670)	540	(4760)	1050	(4860)	5	–	–
-98-98-C	1230	(10460)	510	(4100)	1110	(6730)	5	–	–
-98-98-D	1730	(16190)	460	(3690)	890	(5950)	–	–	5
-98-98-E	1730	(13670)	460	(3690)	890	(4860)	5	–	5
-98-98-F	1230	(10460)	460	(3690)	890	(5950)	5	–	5
-98-98-G	1730	(16190)	460	(3690)	890	(5950)	–	5	5
-98-98-H	2060	(13670)	540	(4760)	970	(4860)	5	5	–
-98-98-I	1230	(10460)	510	(4110)	970	(6730)	5	5	–

Load rating of plastic hinges

in ascending order of the standard numbers

Article No.	Radial load rating L_{R0} in N	L_{R90} in N	Axial load rating L_A in N	Max. tightening torque of the hinge attachment in Nm		
				Bore	Thread	Bolt
GN 159 -54-17,5-17,5	1850 (3710)	300 (1700)	440 (2570)	5	–	–
-64-17,5-22,5	1750 (3490)	590 (870)	320 (2280)	5	–	–
-69-17,5-25	1760 (3520)	190 (780)	240 (2150)	5	–	–
-84-17,5-32,5	1600 (3190)	180 (850)	280 (1510)	5	–	–
-74-22,5-22,5	1750 (3490)	220 (870)	320 (2280)	5	–	–
-79-22,5-25	1750 (3490)	390 (780)	240 (2150)	5	–	–
-94-22,5-32,5	1600 (3190)	180 (850)	280 (1510)	5	–	–
-84-25-25	1760 (3520)	190 (780)	240 (2150)	5	–	–
-99-25-32,5	1600 (3190)	180 (780)	240 (1510)	5	–	–
-114-32,5-32,5	1600 (3190)	180 (850)	280 (1510)	5	–	–
GN 159.1-89-35-35	1850 (3710)	300 (1700)	440 (2570)	5	–	–
-109-40-40	1750 (3490)	220 (870)	320 (2280)	5	–	–
-99-40-40	1750 (3490)	220 (870)	320 (2280)	5	–	–
-119-45-45	1750 (3490)	220 (870)	320 (2280)	5	–	–
-104-42,5-42,5	1760 (3520)	190 (780)	240 (2150)	5	–	–
-124-47,5-47,5	1750 (3490)	190 (780)	240 (2150)	5	–	–
-134-50-50	1760 (3520)	190 (780)	240 (2150)	5	–	–
-119-50-50	1600 (3190)	180 (850)	280 (1510)	5	–	–
-139-55-55	1600 (3190)	180 (850)	280 (1510)	5	–	–
-149-57,5-57,5	1600 (3190)	180 (780)	240 (1510)	5	–	–
GN 233 -37-43	1400 (1800)	500 (1000)	700 (1100)	1	–	–
-57-64	2250 (3200)	1500 (2500)	1500 (2350)	3	–	–
GN 237.1-30-30-A	1700	1000	1400	3	–	–
-30-30-B	1700	850	1300	3	–	–
-40-40-A	1900	1280	1900	3	–	–
-40-40-B	1600	1000	1900	5	–	–
-40-40-C	1900	1000	2000	–	–	5
-40-40-D	1900	1000	1900	3	–	5
-40-40-E	1600	1000	1900	5	–	5
-50-50-A	2400	1720	2630	5	–	–
-50-50-B	2410	1360	2860	5	–	–
-50-50-C	2560	2100	2340	–	–	5
-50-50-D	2400	1720	2340	5	–	5
-50-50-E	2410	1360	2340	5	–	5
-60-60-A	2960	3070	3320	5	–	–
-60-60-B	2810	2170	3440	5	–	–
-60-60-C	3940	2130	3000	–	–	5
-60-60-D	2960	2130	3000	5	–	5
-60-60-E	2810	2130	3000	5	–	5

Load rating of metal hinges

in ascending order of the standard numbers

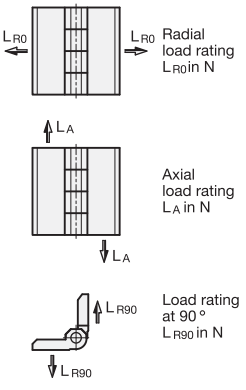

An extensive series of tests were carried out with the hinges listed below.

The hinges were slowly loaded and relieved at room temperature with incrementally increasing force. After load relieve, a deformation irrelevant in terms of function and appearance remained at the listed values for L_A, L_{R0} and L_{R90}. The breaking loads were in most cases multiples above the specified value.

The details given on load rating are non-binding guide values without any liability. In general, they do not constitute a warranty of quality.

The user must determine from case to case if a product is suitable for the envisaged use. Ambient factors and ageing may influence the specified values.

Article No.		Radial load rating		Axial load rating
		L_{R0} in N	L_{R90} in N	L_A in N
GN 127	-76-60	2000	2000	1150
GN 136	-40-40-ST	1000	700	2000
	-50-50-ST	2000	1000	2500
	-60-60-ST	2500	1200	2800
	-40-40-NI	1000	700	2000
	-50-50-NI	2000	1000	2500
	-60-60-NI	2500	1100	2800
GN 138	-ZD-40-42-A	1500	4000	1000
	-ZD-50-52-A	3500	6000	1750
	-ZD-60-62-A	4000	6500	2000
GN 139.1	-49-101	1000	1000	1500
	-79-101	500	500	750
GN 139.2	-49-101	1000	1000	1500
	-79-101	500	500	750
GN 139.5	-76-126	2000	2000	2000
GN 139.6	-76-126	2000	2000	2000
GN 161	-57	1150	1500	600
	-68	1500	1200	750
	-80	2500	2500	1000
GN 237	-AL-30-30-A-EL	1200	750	550
	-AL-40-40-A-EL	2000	2800	1060
	-AL-50-50-A-EL	3000	4250	2250
	-AL-60-60-A-EL	5000	5150	4050
	-NI-30-30-A-GS	1700	750	750
	-NI-40-40-A-GS	4000	1650	2100
	-NI-50-50-A-GS	6500	2250	2550
	-NI-60-60-A-GS	10000	5000	5000
	-NI-40-40-A-GS	4000	1650	2100
	-NI-50-50-A-GS	6500	2250	2550
	-NI-60-60-A-GS	10000	5000	5000
GN 237	-ZD-30-30-A	1200	750	500
	-ZD-40-40-A	2100	2000	1150
	-ZD-50-50-A	3500	2450	2100
	-ZD-60-60-A	6000	4400	3200

Article No.		Radial load rating L_{R0} in N	L_{R90} in N	Axial load rating L_A in N
	-ZD- 40-40-C	1700	1850	900
	-ZD- 50-50-C	3550	2000	2050
	-ZD- 60-60-C	4050	2550	3050
GN 237	-NI- 63-50-A-GS	4000	2000	1500
	-NI- 76-50-A-GS	4000	2000	1200
	-NI- 90-60-A-GS	4500	2000	1500
	-NI-120-60-A-GS	4500	2000	1200
	-ZD- 63-50-A	3000	1250	1500
	-ZD- 76-50-A	3000	1250	1300
	-ZD- 90-60-A	4500	1500	1500
	-ZD-120-60-A	4500	1500	1300
	-ZD- 63-50-C	3000	2000	1500
	-ZD- 76-50-C	3000	2000	1200
	-ZD- 90-60-C	4500	1500	2000
	-ZD-120-60-C	4500	1500	1500
GN 238	-42-42-BJ	1500	2100	1050
	-42-42-EJ	1000	1500	1200
	-42-42-NJ	1250	1350	1500
	-50-50-BJ	1500	2200	1500
	-50-50-EJ	1500	1700	1500
	-50-50-NJ	1800	1900	2000
	-60-60-BJ	2500	3200	1500
	-60-60-EJ	2000	2000	1500
	-60-60-NJ	3700	2600	2550
GN 337	-NI-40-40-A-GS	3000	3500	2000
	-NI-50-50-A-GS	5000	3500	2500
	-NI-60-60-A-GS	6000	6000	5000
	-ZD-40-40-A	2200	1600	1500
	-ZD-50-50-A	3000	2500	2500
	-ZD-60-60-A	4300	3500	3100
GN 437	-ZD-40-40-A	2400	1600	1200
	-ZD-50-50-A	3200	2000	1600
	-ZD-60-60-A	4500	2500	2000

Numerical Index

000	→ Page
GN 21	216
GN 23	216
GN 30	218
GN 31	220
GN 32	222
GN 33	224
GN 40	226
GN 41	228
GN 42	226
GN 43	228
GN 50.6	307
GN 55.1	308
GN 55.2	309
GN 55.3	310
GN 55.4	311
GN 70	312
GN 75	29
GN 75.5	29

100	→ Page
GN 111.6	134
GN 115	236/241
GN 115.8	242/245
GN 115.10	248/250
GN 119.3	246
GN 129.2	272
GN 129.3	273
GN 129.5	274
GN 132.5	286
GN 138	262
GN 139.1	254
GN 139.3	258
GN 139.4	258
GN 139.5	256
GN 139.6	256
GN 145	287
GN 146.5	288
GN 146.6	288
GN 150.5	59
GN 151.4	263
GN 159	266
GN 159.1	268
GN 163.5	289
DIN 172	140
DIN 179	140
DIN 181	38
GN 192.5	290

200	→ Page
GN 214.6	133
GN 227.4	53
GN 231	291
GN 233	270
GN 237	259
GN 252	137
GN 252.5	137
GN 296	293
GN 297	294

300	→ Page
GN 300.6	54/55
GN 333	41
GN 339	235
GN 355	162
GN 355.1	163

400	→ Page
GN 412	123
GN 413	121
GN 416	124
GN 416.1	125
GN 417	118/119
GN 417.1	120
GN 418.2	182
GN 423	40
GN 426.5	37
GN 426.6	36
GN 434	72
GN 437	264
GN 472.3	51
GN 475	295
GN 476	296
GN 482	297
GN 483	298
GN 484	299
GN 490	300

500	→ Page
GN 509	172
GN 509.3	171
GN 511	301
GN 511.1	302
GN 526	86
GN 526.1	87
GN 548.1	281
GN 565	30
GN 565.1	31
GN 565.3	35
GN 565.5	32
GN 565.7	34
GN 570.2	50

600	→ Page
GN 603	56
GN 603.1	57
GN 612.3	130
GN 612.9	131
GN 612.10	132
GN 614.5	135
GN 623	60
GN 623.5	60
GN 630	42
GN 630.1	39
GN 648.8	284
GN 648.9	285
GN 649	304
GN 649.1	305
GN 650.4	277
GN 653.2	74
GN 675	27/28
GN 675.1	27

Numerical Index

700	→ Page
GN 702	251
GN 704	169
GN 705	164
GN 706.2	166
GN 706.4	168
GN 707.2	167
GN 709.6	158
GN 709.7	159
GN 709.8	160
GN 711.2	85
GN 711.3	85
GN 717	114
GN 719.2	26
GN 720	252
GN 725.1	33
GN 727	88
GN 731	46
GN 731.1	48
GN 736	52
GN 743	275
GN 743.1	275
GN 743.4	276
GN 743.5	276
GN 782	283

800	→ Page
GN 810	184/186
GN 810.1	188/190
GN 816	126
GN 816.1	128
GN 817	113
GN 817.1	116
GN 817.8	115
GN 817.9	117
GN 820	200/202
GN 820.1	206/208
GN 822.7	122
GN 825.1	43
GN 825.2	44
GN 826	170
GN 844	208
GN 852.1	210

900	→ Page
DIN 908	278
GN 910	194
GN 910.1	196
GN 910.2	198
GN 910.3	200
GN 910.5	201
GN 910.6	201
GN 910.7	201
GN 910.8	201
GN 910.9	201
GN 911	292
GN 927	178
GN 927.4	180
GN 957	112
GN 965	142
GN 967	306
GN 968	150

1000	→ Page
GN 1130	176
GN 1132	177
GN 1524	136

2000	→ Page
GN 2277	78
GN 2277.1	79
GN 2278	80
GN 2279	81
GN 2280	82
GN 2281	83
GN 2282	84
GN 2370	260
GN 2372	261
GN 2402	93
GN 2404	94
GN 2406	95
GN 2408	96
GN 2410	97
GN 2422	103
GN 2424	104
GN 2424.1	105
GN 2426	106
GN 2428	107

3000	→ Page
GN 3490	303
GN 3663	73

5000	→ Page
GN 5334.4	62/63
GN 5335	70/71
GN 5337.2	66/67
GN 5337.6	68
GN 5337.9	69
GN 5345	64
GN 5345.4	64
GN 5860	176

6000	→ Page
GN 6305.1	58
GN 6311.1	161
GN 6336.13	65
GN 6342	139
GN 6343	138

7000	→ Page
GN 7403	282
GN 7490	280
DIN 7603	279

8000	→ Page
GN 8330	212

www.ganter-griff.com

Distributed by:

Berger Tools Ltd
Units B1 & B2
Chaucer Business Park
Watery Lane
Kemsing, Nr. Sevenoaks
Kent TN15 6QY
GB

Phone +44 (0) 1732 763377
Fax +44 (0) 1732 763335
E-Mail sales@berger-tools.co.uk
www.berger-tools.co.uk

Edition January 2016