GN 300.2 Adjustable hand levers

Zinc die casting, threaded stud steel zinc plated

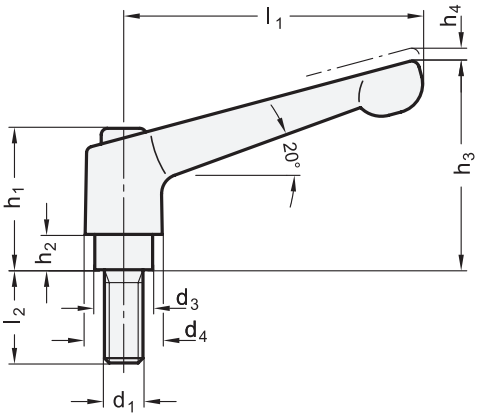

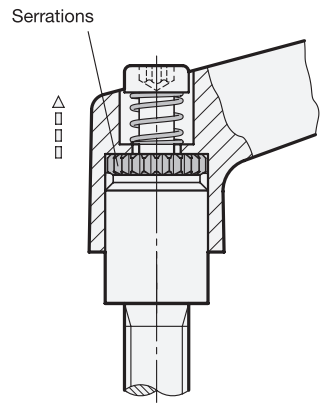

1 l_1	2 d_1		3 l_2							d_3	d_4	h_1	h_2	h_3	h_4 Stroke
22	M 3	-	6	8	10	12	16	-	-	8	10,5	18,5	2	23	3
22	M 4	M 5	12	16	20	25	32	-	-	8	10,5	18,5	2	23	3
30	M 4	-	12	16	20	25	32	-	-	10	13	24,5	4	31	3,5
30	M 5	M 6	12	16	20	25	32	40	50	10	13	24,5	4	31	3,5
45	M 4	-	12	16	20	25	32	-	-	10	13	24,5	4	34	3,5
45	M 5	M 6	12	16	20	25	32	40	50	10	13	24,5	4	34	3,5
63	M 6	M 8	16	20	25	32	40	50	63	13,5	17,5	31	6,5	45	4
78	M 8	M 10	20	25	32	40	50	63	80	16	21	36	8	54	4
92	M 10	M 12	20	25	32	40	50	63	80	19	24	43	11	64	4
108	M 16	-	32	40	50	63	80	-	-	23	30	50,5	12	75	5

Specification

4

- Handle
  Zinc die casting
- Plastic coated
  black, RAL 9005, textured finish — SW
  orange, RAL 2004, textured finish — OS
  red, RAL 3000, textured finish — RS
  silver, RAL 9006, textured finish — SR
- chrome-plated — CR
- uncoated
  slide ground — RH
- Threaded stud and retaining screw
  Steel
  zinc plated, blue passivated
- RoHS

Information

Adjustable hand levers GN 300.2 are ideal whenever parts have to be clamped in a confined space or in a particular lever position. The centre insert is connected to the lever via serrations which can easily be disengaged.

Pulling the lever, disengages the serrations and allowing it to be swivelled to the ideal clamping position. On releasing the lever the serrations automatically re-engage.

see also...

- *Adjustable hand levers GN 300 (threaded stud steel, blackened)* → *Page 319*
- *Adjustable hand levers GN 300.1 (threaded stud St. Steel)* → *Page 321*
- *Adjustable Stainless Steel-Hand levers GN 300.5 (matte shot-blasted)* → *Page 325*
- *Adjustable hand levers GN 303 (with push button, threaded stud steel)* → *Page 329*
- *Adjustable hand levers GN 303.1 (with push button, threaded stud Stainless Steel)* → *Page 331*

How to order

1 2 3 4

GN 300.2-63-M6-25-RS

1	l_1
2	d_1
3	l_2
4	Color (Finish)