GN 483 T-Swivel clamp mountings

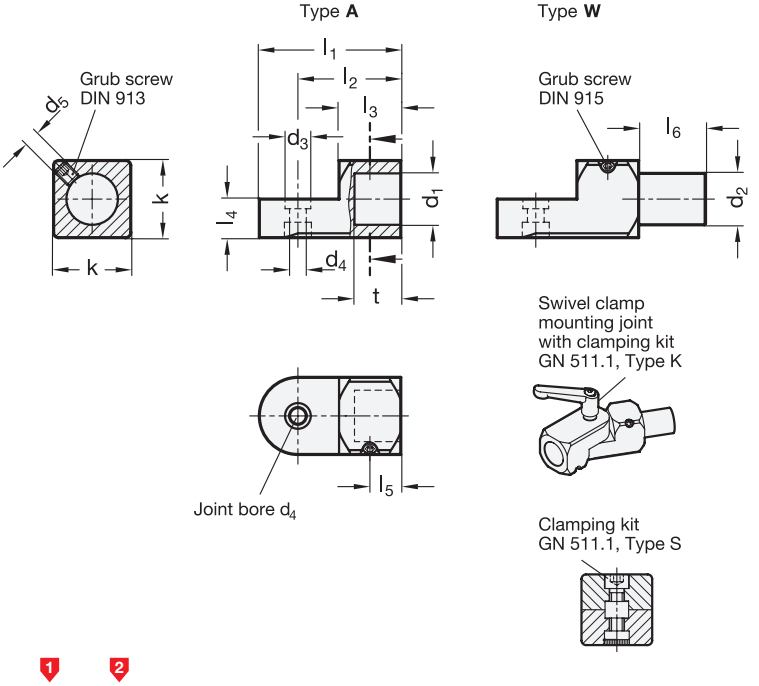

Inox
Stainless
Steel

3 Type

A with bore
W with bolt

1 d_1 Type A	1 d_2 Type W	2 k	d_3	d_4 Joint bore	d_5	l_1	l_2	l_3	l_4	l_5	l_6	t	Clamping kit for d_4 Type S	Clamping kit for d_4 Type K
B 8	8	16	7	4,5	M 4	30	22	13	8	5,5	16	8	GN 511.1-M4-16-S	GN 511.1-M4-16-K
B 10	10	20	8,5	5,5	M 5	38	28	17	10	7	17	10	GN 511.1-M5-20-S	GN 511.1-M5-20-K
B 12	12	20	8,5	5,5	M 5	38	28	17	10	8	19	12	GN 511.1-M5-20-S	GN 511.1-M5-20-K
B 15	15	25	10	6,5	M 6	46	33,5	20	12,5	10	21	15	GN 511.1-M6-25-S	GN 511.1-M6-25-K
B 16	16	25	10	6,5	M 6	46	33,5	20	12,5	11	24	16	GN 511.1-M6-25-S	GN 511.1-M6-25-K
B 20	20	30	10	6,5	M 6	55	40	24	15	12	26	18	GN 511.1-M6-30-S	GN 511.1-M6-30-K

Specification

4

- Aluminium
  - matt, slide ground **MT**
  - anodized black **ELS**
- Bolt (Form W)
  Steel zinc-plated, blue passivated
- Grub screw DIN 913 (Type A)
  Stainless Steel AISI 304
- Grub screw DIN 915 (Type W)
  Stainless Steel AISI 304
- *Stainless Steel characteristics*
  → Main catalogue page 1144
- RoHS compliant

Information

Using swivel clamp mountings GN 482 and attachment clamp mountings GN 484 with the same k dimensions, T-Swivel clamp mountings GN 483 are easily combined into articulated swivel clamp mounting joints. Clamping kits GN 511.1 with screw, type S and adjustable hand lever, type K are available for this purpose (description see table of dimensions).

see also...

- *Swivel clamp mountings GN 482 → New products*
- *Attachment clamp mountings GN 484 → New products*
- *Retaining rods / Retaining tubes GN 480.1 → Main catalogue page 1085*

T-Swivel clamp mountings with bore

1 2 3 4
GN 483-B12-20-A-MT

1	d_1
2	k
3	Type
4	Finish

T-Swivel clamp mountings with bolt

1 2 3 4
GN 483-20-30-W-ELS

1	d_1
2	k
3	Type
4	Finish