INOX STAINLESS STEEL

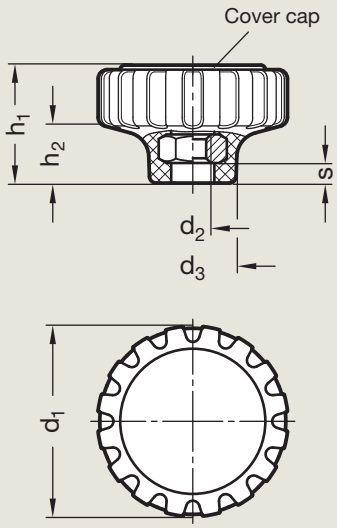

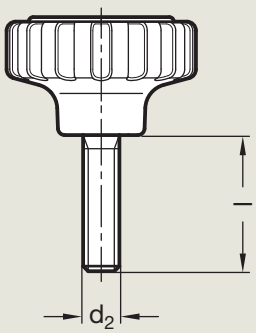

d1	d2	Length l					d3	h1	h2	s	max. thread depth for female thread
34	M 6	11	15	20	25	30	16	20	10,5	5	19
42	M 8	15	20	25	30	40	19	25	13	5	24
53	M 10	20	25	30	40	50	24	31	16	5	30

Specification

- Plastic
  glas fibre reinforced
  temperature resistant
  up to 130° C

  black, matt
- Threaded bush
  Steel **ST**
  zinc plated, blue passivated

  Stainless Steel **NI**
  German Material No. 1.4301
- Colour of the cover cap:
  light grey, matt

Information

Knurled knobs GN 7336 distinguish an attractive design in combination with closed shape (no recess on the underside of the handles).

The threaded inserts are standard hexagonal nuts or hexagonal screws which are press-fitted in mechanically.

For custom versions, the cover cap is also available in different colours and with printed lettering.

Knurled knobs GN 7336 are also available without threaded insert.

How to order

Knurled knob
GN 7336-42-M8-NI

Code no. — | d1 | d2 | Material

Knurled knob
with threaded stud
GN 7336-34-M6-20-ST

Code no. — | d1 | d2 | Length l | Material

Knurled knobs

with Steel- / Stainless Steel-inserts	GN 7336	p. 28
Clamping knobs w. indexing plunger	GN 7336.7	p. 30
Clamping indexing plungers	GN 7336.8	p. 31